UNDER PEER REVIEW

Original Research Article

Double-Balanced Mixer for RF Applications

ABSTRACT

Differential implementation is becoming highly popular in RFIC (radio frequency integrated circuit) design, notably for its high immunity to common-mode noises, acceptable rejection of parasitic coupling, and increased dynamic range. One RF front-end building block that is usually designed as a differential circuit is the mixer. This paper presents a design, study, and optimization of a differential mixer, more specifically the double-balanced mixer implemented on a direct-conversion architecture in a standard 90nm CMOS (complementary metal-oxide semiconductor) process. Operating frequency is set to 5GHz, which is a typical frequency for RF (radio frequency) receiver. Impedance matching was necessary to design and fully optimize the mixer design. The direct-conversion double-balance mixer design ultimately achieved conversion gain of 11.463dB and noise figure of 16.529dB, comparable to mixer designs from past research and studies.

Keywords: Double-balanced mixer; direct-conversion; conversion gain; noise figure; RF

1. INTRODUCTION

The front-end of a RF (radio frequency) wireless receiver is of particular interest to many RF IC (radio frequency integrated circuit) designers and researchers as it attests to be the most critical part in many communication systems and wireless applications like the Bluetooth, WiFi (wireless fidelity), and WiMAX (worldwide interoperability for microwave access). The block diagram of a typical RF or wireless receiver is shown in Fig. 1.

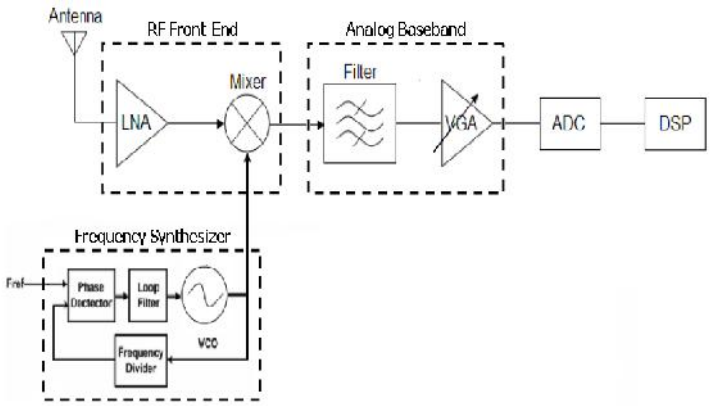

Fig. 1. Block diagram of a typical wireless receiver

UNDER PEER REVIEW

Mixer is among the front-end building blocks of an RF receiver. It is also referred to as a converter because it converts RF signals into a lower intermediate frequency (IF) by mixing with an offset local oscillator (LO). Depending on the RF receiver requirements, mixers must undergo a careful design process since complex tradeoffs exists among different performance parameters.

2. LITERATURE REVIEW

Receivers can be categorized as high-IF, low-IF, and zero-IF or direct-conversion based on the resulting IF signal they operate. For the direct-conversion receiver, IF is designed to be centered at DC (direct current) or zero frequency. This indicates that the LO frequency is equal to the input RF frequency. With zero-IF, image signal is avoided and the analog filtering problem can be easily handled. Moreover, the desired signal is translated directly to the baseband, allowing analog-to-digital converter (ADC) and digital signal processing (DSP) circuits to perform modulation and other auxiliary functions [1]. This eliminates the need for highly complex filters since channel selection only requires a low-pass filter (LPF) as shown in Fig. 2. Smaller and cheaper receivers with low power consumption could be realized for various wireless applications such as Bluetooth, WiFi, and WiMAX. Many of the implemented receivers in WiMAX [2] [3] use the zero-IF architecture since the LPFs make sure that the closely-spaced carrier signals do not cause interference with each other.

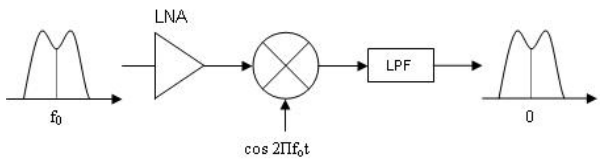

Fig. 2. Direct-conversion or zero-IF receiver

Designing a mixer must take into consideration the tradeoffs among the performance parameters. As previously mentioned, a careful study of these important parameters must be done in order to design a fully-functional and optimized mixer. A mixer's efficiency on frequency conversion from RF to IF is characterized by conversion gain (CG) or loss, expressed in Eq. (1) and (2). CG is the ratio of the desired IF output to the value of the RF input, and may be expressed in voltage or power. In cases when conversion gain is less than unity or 0dB, it is appropriately termed as a conversion loss.

$$CG_{voltage} = 20\log\frac{V_{IF}}{V_{RF}} \qquad \text{Eq. (1)}$$

$$CG_{power} = 20\log\frac{P_{IF}}{P_{RF}} \qquad \text{Eq. (2)}$$

Conversion gain is preferred over conversion loss because amplification along with frequency translation. Nonetheless, it should be noted that conversion gain directly affects the noise figure and linearity of the overall receiver. Hence, design tradeoffs concerning these parameters are inevitable.

Noise figure (NF) is another important parameter of the mixer. It is a measure of the amount of signal-to-noise-ratio (SNR) degradation introduced by the mixer as seen at the output. Eq. (3) shows the relation between the SNR at the input port and the SNR at the output port of the mixer.

$$NF = 10\log\left(\frac{SNR_{IN}}{SNR_{OUT}}\right) \qquad \text{Eq. (3)}$$

Noise figures of mixers tend to be higher than amplifiers (i.e. low-noise amplifiers, power amplifiers) because of the contribution of noise from other frequencies (apart from input RF signal) that can mix down to the IF. This considerable noise in mixers is the main reason why low-noise amplifiers (LNA) are used in the front-end, before the mixer [4].

A popular solution for the mixer is based on the double-balanced topology, with the schematic shown in Fig. 3. Double-balanced mixer is also commonly known as Gilbert cell mixer. It operates with

UNDER PEER REVIEW

differential LO and RF inputs. In this topology, LO products are prevented from getting to the output by combining two single-balanced mixers. As illustrated in Fig. 3, the two single-balanced mixers are connected in anti-parallel as far as the LO is concerned, but in parallel for the RF signal. Thus, the LO terms sum to zero in the output, whereas the converted RF signal is doubled in the output [4]. This is most desirable for high port-to-port isolation and spurious output rejection applications.

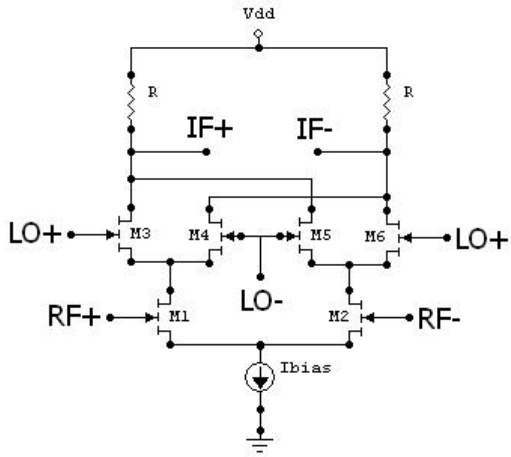

Fig. 3. Double-balanced mixer configuration

3. ACTUAL MIXER DESIGN

Double-balanced mixer topology can provide high conversion gain, very low noise figure, and high degree of LO-IF isolation. The main disadvantage of this topology is its physical implementation. A balun transformer is required to convert the single-ended input to a differential RF input signal of the mixer. Transformers with very low insertion loss are difficult to realize in monolithic integration, hence this forces the use of an off-chip transformer which occupies more board space and cost [5]. An alternative solution is to use active baluns in place of their passive counterparts, as they can produce gain, occupy smaller chip area and can operate at RF and higher frequencies [6].

The goal of the paper is then to design and optimize a direct-conversion double-balanced mixer implemented in a standard 90nm CMOS (complementary metal-oxide semiconductor) process, operating at frequency of 5GHz which is a typical frequency for an RF receiver. The target specifications of the figures of merit are based on the performance comparison in terms of conversion gain and noise figure of past researches on direct-conversion active mixer topologies given in Table 1.

Table 1. Performance comparison of mixer designs

Reference Design	RF (GHz)	Conversion Gain (dB)	Noise Figure (dB)	Topology
[3]	2~11	21.5~22.8	21.5~25.8	Double-balanced
[5]	3.4~3.85	10	10	Single-balanced
[7]	2	19.5	10.2	BiCMOS Double-balanced
[8]	20~40	16	--	BiCMOS Single-balanced
[9]	5.2	9.3	10.5	Double-balanced

Shown in Fig. 4 is the schematic design of the double-balance mixer. It is important to determine the proper biasing and sizing of all the transistors such that RF transistors (M1-M2) will operate in the saturation region while the LO transistors (M3-M6) operate near the boundary of the saturation and linear regions. The mixer design used nsvt (NMOS standard Vt) which is the typical model for the transistor.

UNDER PEER REVIEW

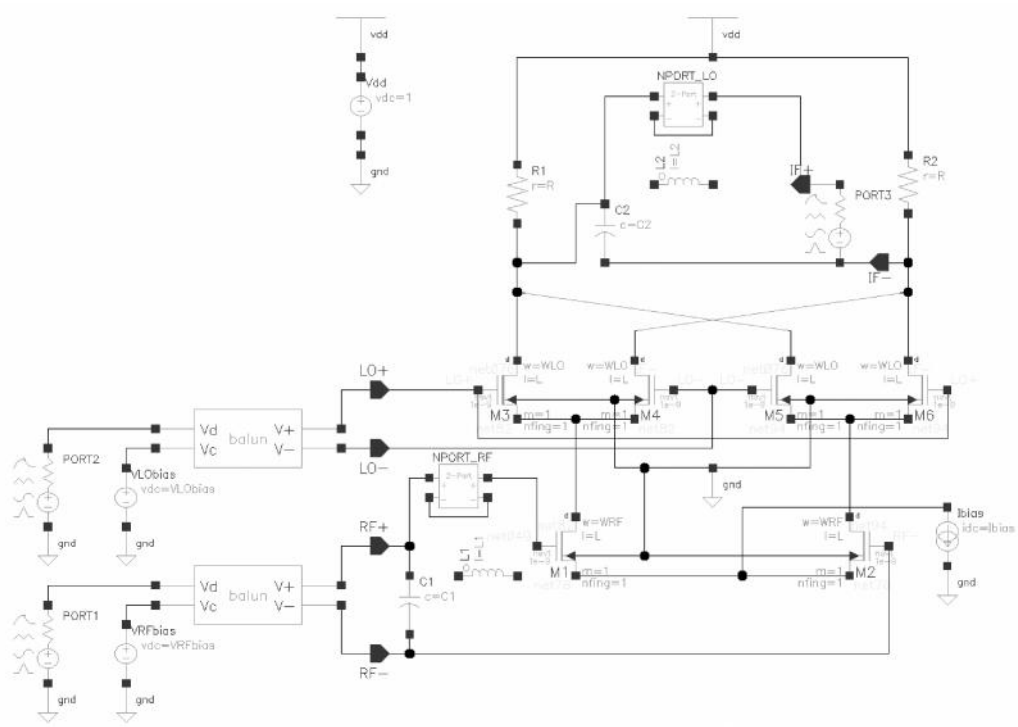

Fig. 4. Schematic design of double-balanced mixer

One way to increase the performance of the mixer in terms of conversion gain and noise figure is to apply impedance matching in the circuit. Z11 and Z22 can be obtained using *sp-analysis* which is swept from f1 = 700MHz to f2 = 6GHz. Actual inductor and capacitor values at f = 5GHz can be computed from the L-network reactances.

To supply differential LO input to the mixer, a port PORT2 with a matching resistor (set to 50Ω) is used which is then fed into an ideal passive balun to convert the single-ended signal into differential. For the differential RF input of the mixer, same setup as the LO is used with PORT1. To use the differential output for measurements, matching the IF output port PORT3 to the output impedance of the mixer is necessary. PORT1 is set to DC source type with pacmag (periodic ac magnitude) set to 1. PORT3, which is the IF port, is set also to DC source type. The only large signal is from PORT2 which is a sine wave with flo=5GHz and P_{LO} = 0dBm.

For the impedance matching, the input matching network is applied before the differential RF input of the mixer instead of placing it before the balun. This will result to an adjustment on the value of L1, which will decrease, since the balun circuit has self-inductance. The adjusted value of L1 can be determined using the sp-analysis swept from f1 = 700MHz to f2 = 6GHz. Moreover, inductors with small inductances are more realizable in actual designs than their larger counterparts. The final values of the L-matching network are summarized in Table 2.

Table 2. Performance comparison of mixer designs of past researches

L and C	Value
L_1	12.7 nH
C_1	1.116 pF
L_2	1.329 nH
C_2	267.127 fF

ASITIC (analysis and simulation of spiral inductors and transformers for ICs) [11] [12] and SpiralCalc (integrated spiral inductor calculator) [13] [14] are software tools used for the design of the inductors. Both tools are available for academic and non-commercial purposes. Table3 shows the design

UNDER PEER REVIEW

parameters obtained for the design of the spiral inductors using ASITIC while Table 4 shows that of using SpiralCalc.

Table 3. Inductor design using ASITIC

Design Parameters	Inductors	
	L_1	L_2
Desired L	12.7 nH	1.329 nH
No. of sides	4	8
Length, D	300 µm	190 µm
Metal width, W	10.886 µm	10.902 µm
Spacing, S	1	1
No. of turns, N	4.25	2.5
Metal layer	7	7
Inductance, L	12.711 nH	1.329 nH
Q-factor, Q	2.322	5.694

Table 4. Inductor design using SpiralCalc

Design Parameters	Inductors	
	L_1	L_2
Desired L	12.7 nH	1.329 nH
No. of sides	4	8
Length, D	300 µm	190 µm
Metal width, W	11.2 µm	10 µm
Spacing, S	1	1
No. of turns, N	6	2
Inductance, L:		
Modified Wheeler	12.885 µm	1.326 µm
Current Sheet	12.739 µm	1.326 µm
Monomial Fit	12.624 µm	1.394 µm

In ASITIC, the spiral inductors are designed such that desired inductances are achieved and the Q-factors are optimized with eddy-current option enabled to include the effects of substrate induced eddy current losses. L1 have smaller Q-factor than L2 because of its high inductance value. For the inductor design using SpiralCalc, same parameter values from the ASITIC parameters are used except for the metal width and the number of turns of the spiral inductor. These parameters are tweaked such that the desired inductances are achieved for the inductors.

The n2port from the analogLib library is used as a model block for all the ASITIC inductors. Touchstone format of S-parameter file is used as file input of the n2port component since the actual S-parameters using ASITIC are given in touchstone format. The figures of merit such as conversion gain and noise figure are determined using SpectreRF in the Analog Design Environment.

A mixer's frequency converting action is characterized by conversion gain or loss. Voltage conversion gain is the ratio of the RMS voltages of the IF and RF signals, earlier given in Eq. (1) and (2). The variations of conversion gain with the power of LO signal (P_{LO}) can be measured using swept *PSS* (Periodic Steady-State) *analysis* with *PAC* (Periodic AC) *analysis*. The *PAC analysis* will then compute the voltage conversion gain in dB20 of the whole circuit with PORT3 as the output port (with output harmonic of 0, which is 5GHz) and PORT1 as the input port (with input harmonic of -1, which is 0GHz). Setting the input port to RF+ port, which is located after the balun circuit, will compute the voltage conversion gain of the mixer only. Simulation plots of the conversion gain swept from P_{LO} = -10dBm to P_{LO} = 30dBm are shown in Fig. 5-7.

UNDER PEER REVIEW

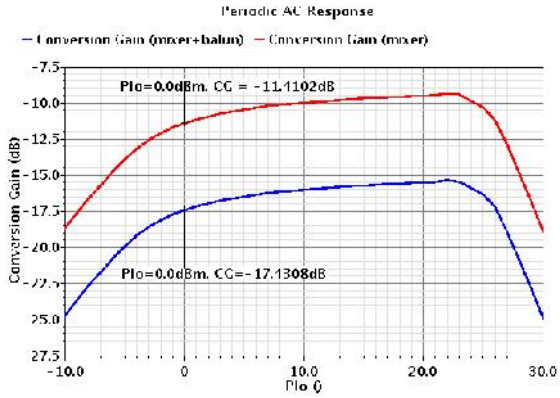

Fig. 5. Conversion gain (in dB) vs. P_{LO} (w/o matching)

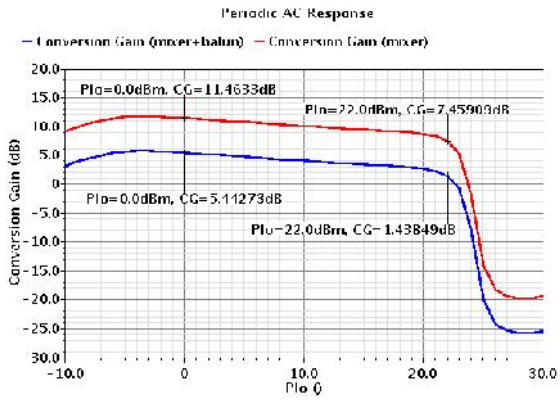

Fig. 6. Conversion gain (in dB) vs. P_{LO} (with ideal L)

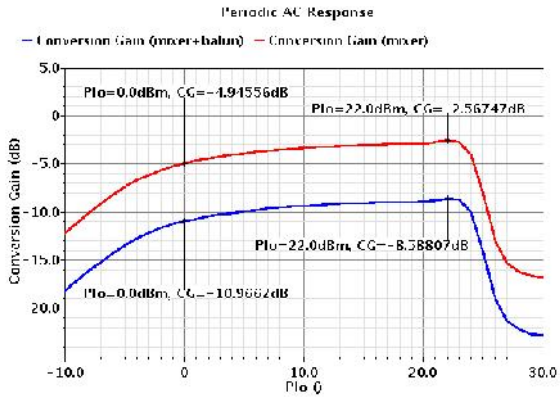

Fig. 7. Conversion gain (in dB) vs. P_{LO} (using ASITIC L)

For the noise figure, *Pnoise* (Periodic Noise) *analysis* with *PSS analysis* is used. In addition, *PSP* (Periodic S-Parameters) *analysis* with *PSS analysis* can also be used to determine the noise figure of the circuit. Noise figure from a sweep range of -10dBm to 30dBm can now be determined and plotted using these analyses. The resulting plots are shown in Fig. 8-9.

UNDER PEER REVIEW

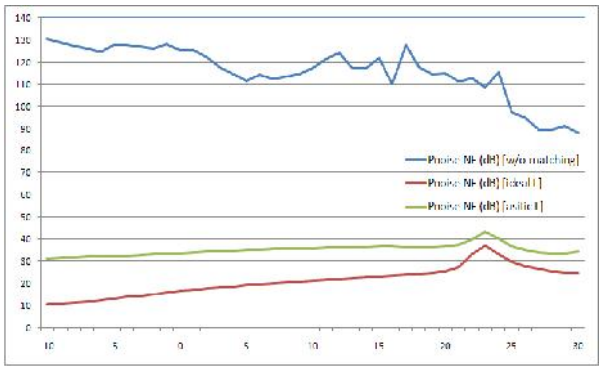

Fig. 8. Noise figure (in dB) vs. P_{LO} of (Pnoise analysis)

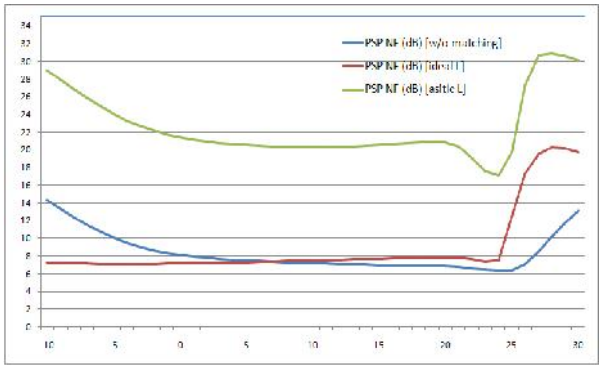

Fig. 9. Noise figure (in dB) vs. P_{LO} of (PSP analysis).

Table 5 summarizes the simulation results for conversion gain and noise figure at P_{LO} = 0dBm.

Table 5. Simulation results, at P_{LO} = 0dBm

Figures of Merit	Value
CG (mixer+balun) [w/o matching]	-17.431dB
CG (mixer) [w/o matching]	-11.410dB
CG (mixer+balun) [ideal L]	5.443dB
CG (mixer) [ideal L]	11.463dB
CG (mixer+balun) [*ASITIC* L]	-10.966dB
CG (mixer) [*ASITIC* L]	-4.946dB
Pnoise NF [w/o matching]	125.355dB
Pnoise NF [ideal L]	16.529dB
Pnoise NF [*ASITIC* L]	33.713dB
PSP NF [w/o matching]	8.127dB
PSP NF [ideal L]	7.136dB
PSP NF [ASITIC L]	21.437dB

4. DISCUSSION OF RESULTS

Based on the conversion gain simulation results as shown in Fig. 5-7 and in Table 5, input and output impedance matching contribute to better performance. Furthermore, using ideal inductors for impedance matching produced better performance as compared to using non-ideal ASITIC inductors through the n2port. It can be observed from the simulation plots that the conversion gain of the mixer only is higher than the conversion gain of the whole circuit consisting of the mixer and the balun. This is because the balun in the circuit, which is a passive balun, has insertion loss and thus incapable of producing gain. When a passive balun is cascaded with another block, for this case the mixer, the overall gain is degraded.

UNDER PEER REVIEW

Input and output impedance matching also contribute to better noise performance of the circuit, as indicated in Fig. 8-9 and Table 5. It can be observed that using ideal inductors for impedance matching produced lower noise figure as compared to using non-ideal ASITIC inductors through the n2port model. The model block n2port introduces noise to the system, hence, adding to the total noise figure of the circuit

5. CONCLUSIONS AND RECOMMENDATIONS

A design of double-balanced mixer with direct-conversion architecture was implemented and optimized on this paper. Conversion gain and noise figure were determined to gauge the performance of the mixer design. These performance parameters can still be enhanced or optimized by applying impedance matching in the circuit. The effect of the passive balun in the mixer design was also observed, resulting to the decrease in the conversion gain of the mixer. Nevertheless, the direct-conversion double-balance mixer design achieved conversion gain of 11.463dB and noise figure of 16.529dB (using Pnoise analysis) at 5GHz, comparable to mixer designs from past studies and research.

Active baluns could be used in place of passive baluns for monolithic implementation. Active baluns are capable of producing gain and if cascaded in a double-balanced mixer to supply the differential RF and LO inputs, the overall performance of the mixer can be improved [6]. Although active baluns are unidirectional converters, they are also used for their large bandwidth, which is beyond what non-ideal passive baluns can provide.

REFERENCES

1. Razavi B. RF microelectronics. Upper Saddle River: Prentice-Hall; 1998.

2. Zhou Y, Yoong CP, Weng LS, Khoi YJ, Wah MCY, Moy KAC, Fatt DWT. A 5 GHz dual-mode WiMAX/WLAN direct-conversion receiver. 2006 IEEE International Symposium on Circuits and Systems, pp. 1-4; May 2006.

3. Atallah JG, Rodriguez S, Zeng LR, Ismail M. A direct conversion WiMAX RF receiver front-end in CMOS technology. Royal Institute of Technology, Stockholm, Sweden; 2007.

4. Lee T. The design of CMOS radio-frequency integrated circuits. Cambridge: Cambridge University Press; 1998.

5. Voltti M, Koivisto T, Tiiliharju E. Comparison of active and passive mixers. 18th European Conference on Circuit Theory and Design, 27-30, pp. 890-893; Aug. 2007.

6. Gomez FR, De Leon MT, Roque CR. Active balun circuits for WiMAX receiver front-end. 2010 TENCON – IEEE Region 10 Conference, pp. 1156-1161; Nov. 2010.

7. Tikka T, Ryynanen J, Hotti M, Halonen K. Design of a high linearity mixer for direct-conversion base-station receiver. IEEE International Symposium on Circuits and Systems; 2006.

8. Hamed KW, Freundorfer AP, Antar YMM. A monolithic double-balanced direct conversion mixer with an integrated wideband passive balun. IEEE Journal of Solid-State Circuits, vol. 40, no. 3; March 2005.

9. Park J, Lee CH, Kim BS, Laskar J. Design and analysis of low flicker-noise CMOS mixers for direct-conversion receivers. IEEE Transactions on Microwave Theory and Techniques, vol. 54, no. 12; December 2006.

10. Gomez FR. Design of impedance matching networks for RF applications. Asian Journal of Engineering and Technology; Oct. 2018 *(In press).*

11. Meyer RG, Niknejad AM. ASITIC for Windows NT/2000. Research in RFIC Design.

UNDER PEER REVIEW

Available: http://rfic.eecs.berkeley.edu/~niknejad/Asitic/ grackle/cygwin_info.html.

12. Niknejad AM, Meyer RG. Analysis and optimization of monolithic inductors and transformers for RF IC's. IEEE CICC'97, Santa Clara, CA, pp. 16.3.1-16.3.4; 1997.

13. Stanford Microwave Integrated Circuits Laboratory. Integrated Spiral Inductor Calculator. Available: http://www-smirc.stanford.edu/ spiralCalc.html.

14. Mohan SS, Hershenson M, Boyd SP, Lee TH. Simple accurate expressions for planar spiral inductances. IEEE Journal of Solid-State Circuits, pp. 1419-1424; Oct. 1999.