UNDER PEER REVIEW

SEIRS MODEL FOR PEDIATRICS WITH LOWER RESPIRATORY TRACT INFECTION

Abstract

Physiologists consider the purpose, function or goal of a biological structure when trying to understand how that structure works. The word immunity (from Latin immunitas) means "freedom from". The main purpose of the immune system is to keep the organism free from unfriendly foreign organisms, cells, or molecules (collectively called pathogens).The ability of the immune system to detect and eliminate most pathogens is essential for the survival of lower respiratory tract infection. (Olubadeji, 2016). One person exhaling infected mucus droplets can transmit a respiratory pathogen (any organism or substance capable of causing disease) to every susceptible person in the immediate environment. Pathogens are transmitted directly from one person to another in droplets of respiratory secretions that are expelled by talking, laughing, coughing, or sneezing. This type of infections are major causes of morbidity and mortality worldwide. Lower respiratory tract infection constituted the second leading cause of death in all age bracket in Nigeria (Loddenkemper, 2013) Chronic lower respiratory diseases rank as the third leading cause of death in the United States (National Center for Health , 2015). These lead to using the mathematical model of SEIRS (Susceptible, Exposed, Infected, Recovered and Susceptible) to stimulate the spread of infection among the pediatrics. The model was qualitatively analyzed and establish that the virus-free state is locally asymptotically stable provided the basic reproduction number is less than unity. We solved the model numerically and simulate the solution for different scenarios on the network. The findings from our simulations are discussed.

Keywords: Mathematical Model, Basic Reproductive Number, Lower respiratory tract infection , Equilibrium Solution, Local asymptotic stability.

1.0 Introduction

Child mortality and morbidity is a factor that can be associated with the well-being of a population. It is also taken as one of the development indicators of health and socioeconomic status in any country (Alderman and Behrman, 2004). In order to reduce child mortality and morbidity which is one of the important Millennium goals, there is need to develop an effective and efficient model both (mathematics and computer science) that can be used to assess the attributes that are responsible for the prevalence of the diseases in pediatrics patients that are having LRTIs. This research is focused on children because a child's death is emotionally and physically damaging for the mourning parents (UNICEF, 2011). Lower respiratory tract infection continues to be the second leading killer of children under five years of age worldwide. It is the leading cause of morbidity and mortality in both developing and developed countries (Rudan et al,2008). WHO, 2010 recognized respiratory diseases as the second important cause of death for children under five years in 2010. WHO, 2014 states that respiratory infections like pneumonia is one of the main three causes for newborn infant deaths.

UNDER PEER REVIEW

Marlais et al., (2011) presented **"**clinical predictors of admission in infants with acute bronchiolitis'' the objective was to identify clinical predictors of hospital admission in infants with acute bronchiolitis and to devise a simple clinical risk scoring system which could be used to aid decision making in the emergency department. Random Sampling Technique.Five predictors of admission used in the study were (age, respiratory rate, heart rate, oxygen saturations and duration of symptoms) were incorporated into the bronchiolitis risk of admission scoring system. The limitation was that, The predictor attributes used were too small also feature selection methods may have selected more relevant attributes hence improving model performance.

Yusuf *et al.,(*2012) presented "Risk factors for admission in children with LRTIs from pediatric emergency department observation unit" the aim of the study was to determine the predictors of subsequent hospital admission from the ED in infants and young children with LRTIs. Random Sampling method was used for the study. Eleven predictors for admission were included in the study. HIV status and Immunization were not included among predictors also feature selection methods could have been used to identify the relevant variables from a larger list of monitored variables used in the study.

Matthew *et al.,* (2013), presented a research work on Deaths due to respiratory tract infections in Africa. The motivation for their study was based on the report of WHO, (2008) that presented that, the most prevalent contributory cause of death identified in all childhood studies undertaken was LRTIs. The limitation of this work was that, limited number of predictive variables were used in the study.

Ahmed et al., 2015 presented the risk factors of childhood acute lower respiratory tract infections in Northern Nigeria. The research was motivated by the need to determine risk factors for ALRTI among Under five children hospitalized. The limitation of this work was that, there was no data mining classification model developed for the work. Algorithms for attributes selection were not applied on dataset to preprocess the dataset. Despite the state of this deadly infection worldwide, especially in Nigeria, there is no existing model to determine the attributes that contribute to the rate of infected pediatrics patients. Therefore, this research work will develop a model to identify the attributes that is responsible for the prevalence of the disease in the pediatric patients.

Moreover, in the SEIRS model, the population of host is divided into four classes, susceptible computers, infected computers and recovered computers and several computer simulations are performed using different initial conditions. The Susceptible – Exposed-Infected - Recovered (SEIRS) model was introduced by Kermack and McKendrick, in 1927 (Leah Edelstein-Keshet 2005). In the model, they divided the population into four distinct groups of: The population of the children used in this model are classified into four categories. Where: S stands for the set of children that are Susceptable to the infection.
E stands for the set of children that are exposed to the infection but not yet infected.
I stands for the set of children that are infected with the infection and
R stands for the set of children that has recovered and temporarily immune to be re-infected.

UNDER PEER REVIEW

2.0 Mathematical Model Formulation

The reason for the SEIRS model was that, the infection is usually known to have a latency (E) period between a child that has been exposed to the infection and are gradually becoming infectious. This period is of the same order of magnitude as the infectious period and hence needs to be included to accurately represent the disease dynamics. Also, respiratory infection caused by virus or bacterial does not have a lasting immunity. Children that recovers from this infection can be susceptible and be reinfected again if all the risk factors are still present. To incorporate an additional characteristic feature of the LRTI, the model is extended in the following ways: The latency period is included by considering a group of pediatrics who have been infected but are not yet infectious. They become infectious at the rate σ. The latency period is assumed to be equal to the time between infection and the beginning of symptoms .The symptoms (coughing, running nose and sneezing) are ways of spreading the infection in an uncondusive environment.

Below is the schematic diagram for the single age class SEIRS model for LRTI transmission

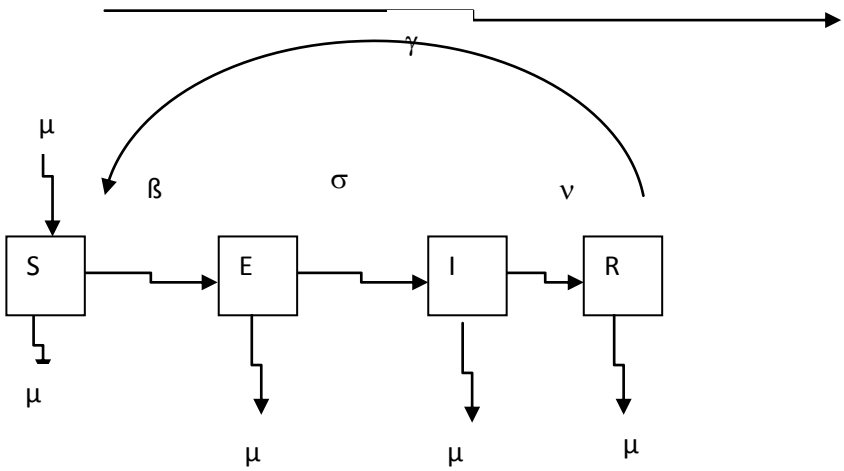

The above assumptions lead to the following differential equations for LRTI.

$$\frac{dS}{dt} = \mu - \beta SI - \mu S + \gamma R \qquad 2.1$$

$$\frac{dE}{dt} = \beta SI - E - \mu E \qquad 2.2$$

$$\frac{dI}{dt} = E - \mu I - I \qquad 2.3$$

$$\frac{dR}{dt} = I - \mu R - R \qquad 2.4$$

UNDER PEER REVIEW

Table 1.0 The description of parameters used in the model

Parameter	Description	Unit
μ	Birth rate of the children i.e the mortality rate	Number / unit time
γ	rate of loss of immunity	Rate /Unit time
ν	Rate of loss of infections	Rate / Unit time
R_0	Basic reproduction number	Rate / Unit time
b_0	Average transmission parameter ß	Rate / Unit time
b_1	Amplitude parameter	Rate / Unit time
β	Transmission parameter (constant rate)	Rate / Unit time
σ	Contact number	Rate / Unit time
ε	Rate of loss of protection by maternal antibodies	Rate / Unit time

The Unit time is (per day)

3.0 Model Analysis

3.1 Two Classes of Epidemiology Models

To introduce the terminologies, notation, and standard results for epidemiology models, two different types of models are formulated and analyzed. They are **Epidemic models** and **Endemic models**. Epidemic model is used to describe rapid outbreaks that occur in less than a year due to the availability of some risk factors, while endemic models are used for studying diseases of longer periods, during which there is a renewal of susceptibles by births or recovery from temporary immunity. The two classic SIR models provide an intuitive basis for understanding more complex epidemiology modeling results.

4.2 Model Equilibrium Solutions

$$\frac{dS}{dt} = \frac{dE}{dt} = \frac{dI}{dt} = \frac{dR}{dt} = 0$$

Thus we have,

$$\frac{dS}{dt} = \mu - \beta SI - \mu S + \gamma R = 0 \text{ ---------- } 3.1$$

$$\frac{dE}{dt} = \beta SI - E - \mu E = 0 \text{ ---------- } 3.2$$

$$\frac{dI}{dt} = \sigma E - \mu I - \nu I = 0 \text{ ---------- } 3.3$$

$$\frac{dR}{dt} = \nu I - \mu R - \gamma R = 0 \text{ ---------- } 3.4$$

From equations 3.1, 3.2, 3.3 and 3.4 simultaneously, we obtained the Virus – free equilibrium From equation 3.

$$\sigma E - \mu I - \nu I = 0$$

Since the infection Free State is known to be diseases free, then,

I =0, Thus,

UNDER PEER REVIEW

$$\sigma E = 0$$

$$E = 0$$

Substitute for I = 0 in equation 4.16

$\nu I - \mu R - \gamma R = 0$

$\nu(0) - \mu R - \gamma R = 0$

$-(\mu + \gamma)\, R = 0$

Dividing through by $-(\mu + \gamma)$, yielding R =0

Thus, substituting for I=0, E =0 and R = 0 in equation 3.1

$\mu - \beta SI - \mu S + \gamma R = 0$

This gives

$\mu - 0 - \mu S + 0 = 0$

$\mu = \mu S$

Divide through by N, this yields,

S =1

Finally the solution set is $[S = 1, I = 0, R = 0]$

and the virus endemic equilibrium is

$$S_E = \frac{(\sigma + \mu)(\mu + \nu)}{\beta\sigma},$$

$$E_E = \frac{-(\mu+\nu)[(\mu+\gamma)[(\mu+\sigma)(\mu+\nu)-\sigma ß]}{\beta\sigma[(\mu+\gamma+\nu)\sigma+(\mu+\gamma)(\mu+\nu)]}$$

$$R_E = \frac{-(\mu+\gamma)[(\mu+\sigma)(\mu+\nu)-\sigma ß]}{ß[(\mu+\gamma+\nu)\sigma+(\mu+\gamma)(\mu+\nu)]}$$

4.3 Local Stability of the virus – free equilibrium

We linearize the system of equations given, using the Jacobian matrix approach to obtain:

Evaluating the Jacobian matrix at the virus – free equilibrium E give

$$J_E \begin{vmatrix} -\mu - \lambda & 0 & -ß & \gamma \\ 0 & -\mu - \sigma - \lambda & ß & 0 \\ 0 & \sigma & -\mu - \nu - \lambda & 0 \\ 0 & 0 & \nu & -\mu - \gamma - \lambda \end{vmatrix} = 0$$

UNDER PEER REVIEW

We defined the characteristic polynomial equation for the J(E) solve for the eigen valves, to get: After a while,the eigenvalues λ_1, i=1,2,3,4 are given as

λ_1 = -

$$\lambda_2 = -\mu - \frac{1}{2}\left[v + \sigma + \sqrt{v^2\, 2v\sigma + 4\beta\sigma + \sigma^2}\right]$$

$$\lambda_3 = -\mu - \frac{1}{2}\left[v + \sigma + \sqrt{v^2 - 2v\sigma + 4\beta\sigma + \sigma^2}\right]$$

$$\lambda_4 = -\mu - \gamma$$

From the above equation, we have the following:

$\lambda_1 < 0$ and $\lambda_4 < 0$

Recall, by definition, since $\nu, \sigma, ß > 0$ their summand are greater than or equal to 0.Hence, $\nu^2 - 2\nu\sigma + 4ß\sigma + \sigma^2 > 0$ and $\sqrt{\nu^2 - 2\nu\sigma + 4ß\sigma + \sigma^2}$ cannot be less than zero nor cannot yield a complex result.

Consequently, $\lambda_3 < 0$

Also , λ_2 must be less than 0, that is,

$$\lambda_2 = -\frac{1}{2}\left[v + \sigma - \sqrt{v^2 - 2v\sigma + 4\beta\sigma + \sigma^2}\right] < 0$$

$$\lambda_2 = -\mu - \frac{(\nu+\sigma)}{2} + \frac{1}{2}\sqrt{\nu^2 - 2\nu\sigma + 4ß\sigma + \sigma^2} < 0$$

$$\frac{1}{2}\sqrt{\nu^2 - 2\nu\sigma + 4ß\sigma + \sigma^2} < \mu + \frac{\nu+\sigma}{2}$$

$$\frac{1}{2}\sqrt{\nu^2 - 2\nu\sigma + 4ß\sigma + \sigma^2} < \frac{2\mu+\nu+\sigma}{2}$$

Multiply through by 2, Hence, we have

$$\sqrt{\nu^2 - 2\nu\sigma + 4ß\sigma + \sigma^2} < 2\mu + \nu + \sigma$$

Divide through by2+ν+σ

$$R_0 = \frac{\sqrt{\nu^2 - 2\nu\sigma + 4ß\sigma + \sigma^2}}{2\mu+\nu+\sigma} < 1$$

Where R_0 is the basic reproduction number.

UNDER PEER REVIEW

It is imperative to note that the *Basic Reproductive Number*, denoted as R_0, is an important threshold in modelling of infections diseases since it tells us if a population is at risk from a disease or not. Thus, whenever $R_0 < 1$ the new cases (i.e. incidence) of the disease will be on the decrease and the disease will eventually be eliminated.

Based on foregoing, the Basic Reproduction number (R_0) for our model is less than unity i.e

$$R_0 = \frac{\sqrt{\nu^2 - 2\nu\sigma + 4ß\sigma + \sigma^2}}{2\mu + \nu + \sigma} < 1$$

Then, $I(t)$ decreases monotonically to zero as $t \to \infty$. Therefore, the virus – free equilibrium is locally stable.

Local stability for endemic equilibrium we have:

$$S_E = \frac{(\sigma + \mu)(\mu + v)}{\beta\sigma},$$

$$E_E = \frac{-(\mu + \nu)[(\mu + \gamma)[(\mu + \sigma)(\mu + \nu) - \sigma ß]}{\beta\sigma[(\mu + \gamma + \nu)\sigma + (\mu + \gamma)(\mu + \nu)]}$$

$$I_E = \frac{-(\mu + \gamma)[(\mu + \sigma)(\mu + \nu) - \sigma ß]}{ß[(\mu + \gamma + \nu)\sigma + (\mu + \gamma)(\mu + \nu)]}$$

$$R_E = \frac{-\nu[(\mu + \sigma)(\mu + \nu) - \sigma ß]}{ß[(\mu + \gamma + \nu)\sigma + (\mu + \gamma)(\mu + \nu)]}$$

For mathematical sensibility, $(S_E, E_E, I_E, R_E) > 0$

Thus, $$I_E = \frac{-(\mu + \gamma)[(\mu + \sigma)(\mu + v)] - \sigma\beta}{\beta[(\mu + \gamma + v)\sigma + (\mu + \gamma)(\mu + v)]} > 0$$

$$-(\mu + \gamma)[(\mu + \sigma)(\mu + v)] - \sigma\beta > 0$$

$$\sigma\beta(\mu + \gamma) - (\mu + \gamma)(\mu + \sigma)(\mu + v) > 0$$

$$\sigma\beta(\mu + \gamma) > (\mu + \gamma)(\mu + \sigma)(\mu + v)$$

Divide through by $(\mu + \gamma)\ (\mu + \sigma)(\mu + \nu)$

This gives,

$$R_0 = \frac{\sigma\beta(\mu + \gamma)}{(\mu + \gamma)(\mu + \sigma)(\mu + v)} > 1$$

UNDER PEER REVIEW

If $R_0 > 1$ then I (t) increases and reaches its maximum and reduces as $\rightarrow \infty$. When the number of children infected increases in this state, it is called the epidemic state. In the long run, the whole population become susceptible if $R_0 > 1$

4.0 Numerical Solution and Simulation

The SEIRS model was solved numerically using Runge – Kutta method. We adopted Matlab ode45 program, which is based on an explicit Runge Kutta (4, 5) formula. It is a one-step solver used in solving a system of first – order ordinary differential equation (ODE). So, in computing $y(t_n)$, it needs only the solution at the immediately preceding time point, $y(t_{n-1})$. In general, ode45 is the best function to apply as a first try for most problems involving systems of first order ODES. Runge kutta of order four is also used in plotting the graphs; it's a powerful and popular method because of its accuracy and stability. Also, its simplicity and stability make it one of the most widely used numerical algorithms for stiff and non-stiff equations, while it converges faster than that of order two or three.

Table 4.0: Simulating the SEIRS model using the following parameter values

Parameters	ν	b_0	b_1	δ	ϕ	μ	γ	ζ	β	R_0
SEIRS(virus free state)	36	50	0.14	91	0.15	0.041	1.8	-	64.5	0.9515756637
SEIRS(Epidemic state)	36	50	0.14	91	0.15	0.041	1.8	-	64.5	1.788822526

These are the parameters used in plotting the graphs: although some of it changes are due to the fact that they are the major factors that are determining the situations of the environment that is, if it is of the virus –free and endemic state.

UNDER PEER REVIEW

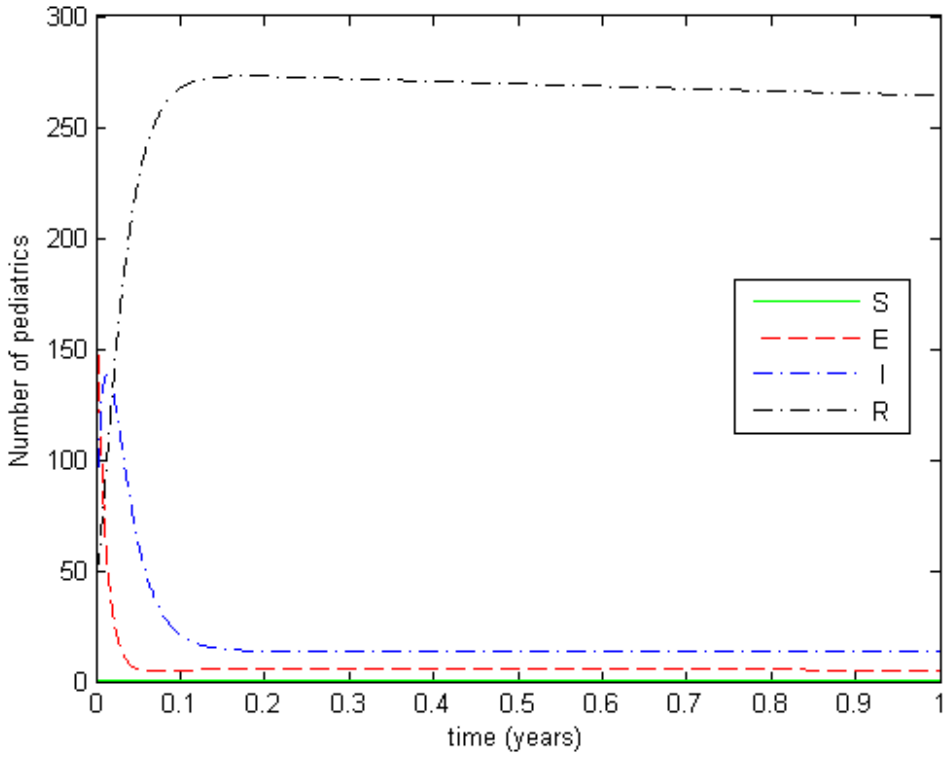

Figure 4.2a Graphical respresentation of SEIRS model between the space of one year with

$S_0 = 100$,$E_0 = 82$, $I_0 = 67$, $R_0 = 46$

Figure 4.2a shows the graphical representation of SEIRS model between the period of one year. All the children in this group were susceptible (S) to LRTIs .We introduce a latency period by introducing a group E of children , about 150 of them who have been infected but are not yet infectious. These children become infectious after some times. For LRTI we can assume the latency period being equal to the time between infection and onset of symptoms, (symptoms like runny nose and sneezing) are the ways of spreading and dispersing the infection. When the infectious children are treated on time, they all recoverd and become susceptible again because the immunity of LRTIs are temporary if the risk factors are still present.

UNDER PEER REVIEW

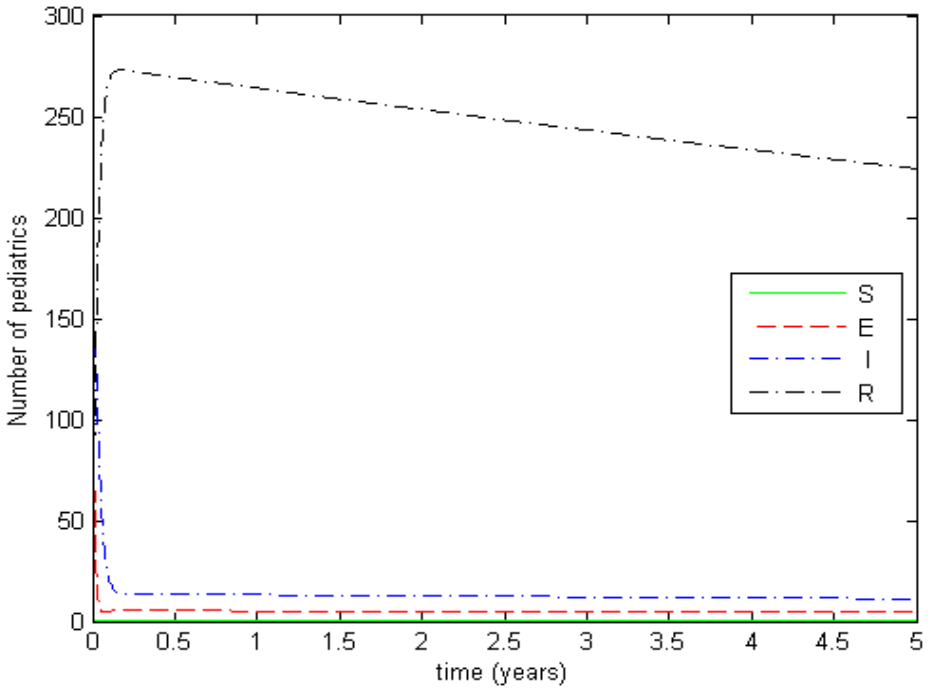

Figure 4.2b Graphical respresentation of SEIRS model between the space of five years

Figure 4.2b shows the graphical representation of SEIRS model between the period of five years. All the children in this group were susceptible (S) to LRTIs .We introduce a latency period by introducing a group E of children , about 150 of them who have been infected but are not yet infectious. These children become infectious after some times. For LRTI we can assume the latency period being equal to the time between infection and onset of symptoms, (symptoms like runny nose and sneezing) are the ways of spreading and dispersing the infection. When the infectious children are treated on time, they all recoverd and become susceptible again because the immunity of LRTIs are temporary if the risk factors are still present.

Conclusion

To conclude, while this model would benefit from calibration against real world data, in its present form it has been shown to be useful in three areas: providing a systems-level view, exposing weaknesses and dependencies and evaluating new technologies. With more data this sort of model could provide valuable insight and prediction for the entire LRTI disease.

UNDER PEER REVIEW

References

1. Ahmed P.A , Yusuf Dawodu K.K (2015) A Childhood acute lower respiratory tract infection in Northern Nigeria: As risk factors

2. Alderman H, Behrman J. R. (2004) Health and Economic Growth Australian Health Ministers' Advisory Council
3. Kermack W. O, McKendrick A. G. (1927) A contribution to the Mathematical Theory of Epidemics Published August 927.DOI: 10.1098/rspa.1927.0118
4. Leah Edelstein-Keshet (2005): "Mathematical models in Biology" Proc. Roy. Soc. London A 115, 700-721
5. Loddenkemper R, Gibson G. J. and Sibille Y.(2013) "Respiratory health and disease in Europe: the new European Lung White Book," European Respiratory Journal,vol. 42, pp. 559–563
6. Marlais .M, Evans .J and Abrahamson E (2011) ''Clinical Predictors of admission in infants with acute bronchiolitis''
7. Matthew B, Victor M, Peter N (2013) : Deaths due to respiratory tract infections in Africa DOI: 10.1097/MCP.0b013e32835f4fe4
8. National Population Commission (NPC) (Nigeria) and ICF International. 2014. Nigeria Demographic and Health Survey. Abuja, Nigeria, and Rockville, Maryland, USA: NPC and ICF International
9. Olubadeji, .B (2016): Development of An Auto-Immune Dendritic Cell Algorithm for Classification problems. Ph.D Thesis, department of computer science, Federal University of Technology, Akure, Ondo State.
10. Rudan ,I., Boschi-pinto,C., Biloglav,Z., Mulholland,K.,and Campbell,H (2008) "Epidemilogy and Etiology of Childhood Pneumonia." Bull World Health Organisation 86(5): 408-16.
11, WHO (World Health Organization) (2010) Child Adolescent Health. Forthcoming. Report on the Methodology and Assumptions Used to Estimate Costs of Scaling Up Selected Child Health Interventions to 95% in Order to Reduce Under-Five Mortality. Geneva: WHO.
12. WHO, "Global Burden of Disease: 2004 update," vol. 1211, World Health Organisation,Geneva,Switzerland,http://www.who.int/healthinfo/globalburdendisease /2004 reportupdate/en/index.html.
13. Yusuf S, Caviness A C, kunle-Ojo A O.(2012) "Risk factors for admission in children with bronchiolitis from pediatric emergency department observation unit". Pediatric Emergency Care.;28:1132–1135.