Oil Pipeline Leak Detection And Localization Using Wireless Sensor Networks

Abstract

This paper describes the development of a wireless sensor network that uses pressure variation to detect and locate leaks in a prototype oil pipeline. The HK1100C oil pressure sensor is used as a sensing unit to sense/monitor pressure variation inside the prototype oil pipeline and outputs the corresponding voltage variation to a microcontroller. The whole network comprises mainly of HK1100C oil pressure sensor, arduino Uno board containing ATmega328P microcontroller, SIM800L GSM module, JHD162ALCD module, audio alarm buzzer, 9V supply. The ATmega328P microcontroller was programmed in C++ programming language. If deployed in Nigeria, the wireless sensor network will be able to monitor oil pipelines against leaks and therefore reduce environmental degradation and economic losses resulting from oil leakages.

Keywords: Wireless sensor networks, Oil pipelines, Leak detection, Pressure data, Pressure variation, ATmega328P microcontroller, C++ programming language.

1. Introduction

Pipelines carrying liquids such as water, crude oil, petro, diesel, e.t.c. are subjects of attacks by vandals, and that is why Okoli and Orinya (2013) quoted NNPC authorities in Nigeria to have reported approximately five thousand incidents of pipeline vandalism between the years 1976 and 1996 and even more damages between the years 2009 and 2011 wherein about 10.9 Billion dollars were lost. Unfortunately, these damages go unnoticed for a long period of time. The consequences are environmental degradation and economic losses which are evident in the polluted environment, health related problems, loss of valuable products, service disruption, repair expenses, clean up cost (Osunleke, Gablar, Inoue, Miyazaki, and Badmus, 2007).

Among the various methods of detecting and locating leaks in pipes are vision based systems, acoustic measurements, fibre optic monitoring and multimodal, ground penetrating

UNDER PEER REVIEW

radar (GPR) based systems, pressure measurements, e.t.c. (Liu and Kleiner, 2012). Yunana, Adewale et al (2017) presented other methods to include manual inspection using trained dogs and lately advanced satellite based hyper spectral imaging methods. Osunleke et al (2007) posited that the above methods are good but not good enough for continuous monitoring activity.

The shortcomings of the above methods led to the development and deployment of wireless sensor networks using pressure variations to detect and locate leaks in pipes on a continuous basis. Azubogu et al (2013) presented a wireless sensor network as a collection of sensor nodes interconnected by wireless communication channels with each sensor node being able to collect data from its surrounding area, carry out simple processing, and communicate with other nodes in the network or directly with the base station. Nweke and Ogbu (2015) stated that wireless sensor networks are the collection of self-powered sensor nodes that coordinates to perform some specific tasks while Akyildiz, Su, Sankarasubramaniam, and Cayiru (2002) noted that the sensor nodes have sensing capabilities, communication components, and data processing facilities with all the nodes in the network collaborating. Puccinelli and Haenggi (2005) stated that a field sensor node is composed of three main elements namely target sensing, processing of gathered data from the field of applications, and communication of processed results to the user who is remotely located. Saini et al (2017) gave some of the applications of wireless sensor networks to include military use for environment monitoring, earthquake warning, and home security. Other applications of wireless sensor networks are drug identification, automatic and recognition security, health applications, smart buildings, agriculture applications, structural monitoring, e.t.c. (Sheikhpour et al (2011); Bokare and Ralegaonkar, (2012). Buratti et al (2009) classified all the applications into two categories namely event detection (ED) and spatial process estimation (SPE).

UNDER PEER REVIEW

This paper writes on a project carried out to monitor oil pipeline against leaks deploying wireless sensor network using pressure variations. The wireless sensor network basically consists of two sections namely the field or transmitting section and the master or receiving section. The field section is mounted on a prototype oil pipeline to monitor the pressure inside the pipeline while the master section uses an LCD and a buzzer to signal pressure decrease and therefore leak. The project is based on the programming of a microcontroller contained in arduino board in C++ program to perform specific tasks.

2. Need For Such A Network

Since leakages must occur in pipelines resulting from either natural means or man caused, it is therefore imperative to monitor pipelines on a continuous basis against leakages. This is to ensure that when and where leakages occur, they are promptly reported. Oil pipeline leakage results into oil spillage that leads to environmental pollution and economic losses. This is where the need for this wireless sensor network arises, which purpose is to monitor the pipeline on a continuous basis against leakages, so that when a leak occurs, it is promptly reported and actions taken to mitigate the environmental and economic consequences of oil spillage.

3. Components Description

3.1. HK1100C Oil Pressure Sensor:

The HK1100C oil pressure sensor is a low cost pressure transmitter manufactured by HaiHuiLai Company. It comes with a stainless steel package, socket type connection, half inch pressure connector, quick connect pressure interface. It is convenient in installation and replacement and prominent in the engineering applications for oil pipeline pressure sensing. The input voltage and

UNDER PEER REVIEW

pressure range can be customized. The supply voltage is 5V dc, the output has range of 0.5 - 4.5V dc, aand the pressure range is 1200kPa. The pressure sensor works for all types of flow.

3.2. Arduino Uno Board:

The Arduino Uno board is a microcontroller based board on 8-bit ATmega328P microcontroller. It contains other components such as crystal oscillator, serial communication, voltage regulator, e.t.c. to support the microcontroller. It has 14 digital input/output pins, 6 analog input pins, a USB connection, a power barrel kack, an ICSP header and a reset button. It operates with 5V dc and a frequency (clock speed) of 16MHz.

3.3. SIM800L GSM module:

The SIM800L GSM module is a miniature cellular module which allows for GPRS communication; sending and receiving SMS and also for making and receiving voice calls. It has low cost, small footprint, and quad band frequency support and a recommended supply voltage of 4V. It can be put in the sleep or idle mode. In this work, the field sensor GSM module is used only for transmission while the master sensor GSM module is used only for reception. A service provider network was used and so coverage area for the network is intended.

3.4. JHD162A LCD module:

The JHD162A LCD module is a 16 X 2 LCD module based on the HD44780 driver from Hitachi and it has 16 pins and operated in 4-bit mode (using only 4 data lines). It has supply voltage of 5V dc. A 16 X 2 LCD means it can display 16 characters per line and there are 2 such lines. The LCD has two registers namely the Command and Data registers. While the command register stores the command instructions, the data register stores the data to be displayed on the LCD.

UNDER PEER REVIEW

4. Block Diagrams and Network Operation

4.1. Transmitting or Field Sensor Section. Figure 1 below gives the block diagram of the field or transmitting section which is otherwise called the field sensor.

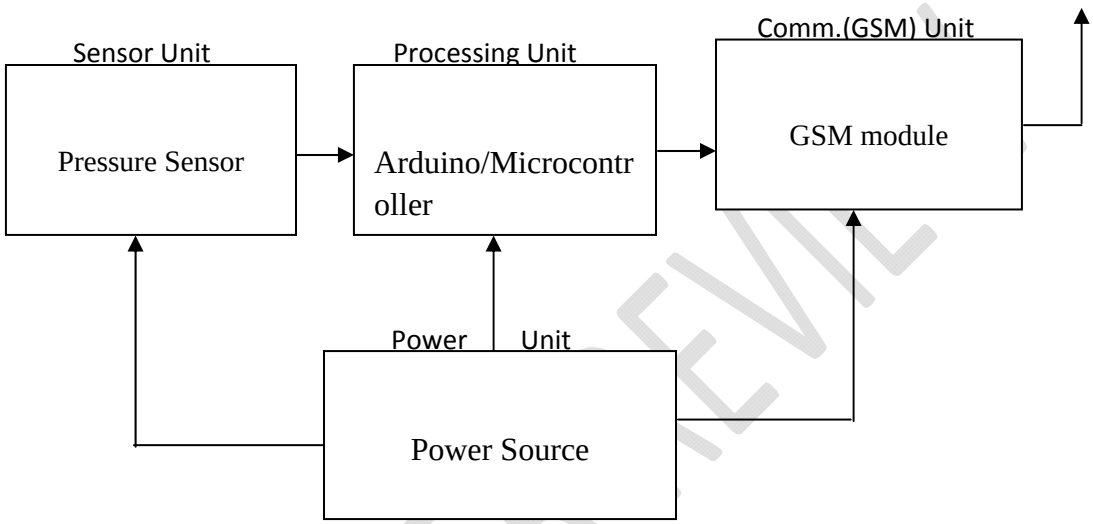

Figure 1: The field sensor node block diagram

In Figure 1 above, the sensor unit consists basically the pressure sensor which measures and converts the pressure values to voltage values. The processing unit is composed of the ardiuno board that contains the microcontroller. The microcontroller has at its input an analog to digital converter that converts the analog voltage signal from the pressure sensor to digital signal before it is fed to the microcontroller. The microcontroller processes the digital voltage signal and produces an output that is sent to the communication unit that contains the GSM module. The signal from the microcontroller is modulated and radiated into the atmosphere in the communication unit. The GSM module is a transceiver but it used here as a transmitter. The power source, which is a dc battery powers the entire field sensor node.

UNDER PEER REVIEW

4.2. Receiving or Master Sensor Section. Figure 2 below presents the block diagram of master or receiving section which is also known as the master sensor.

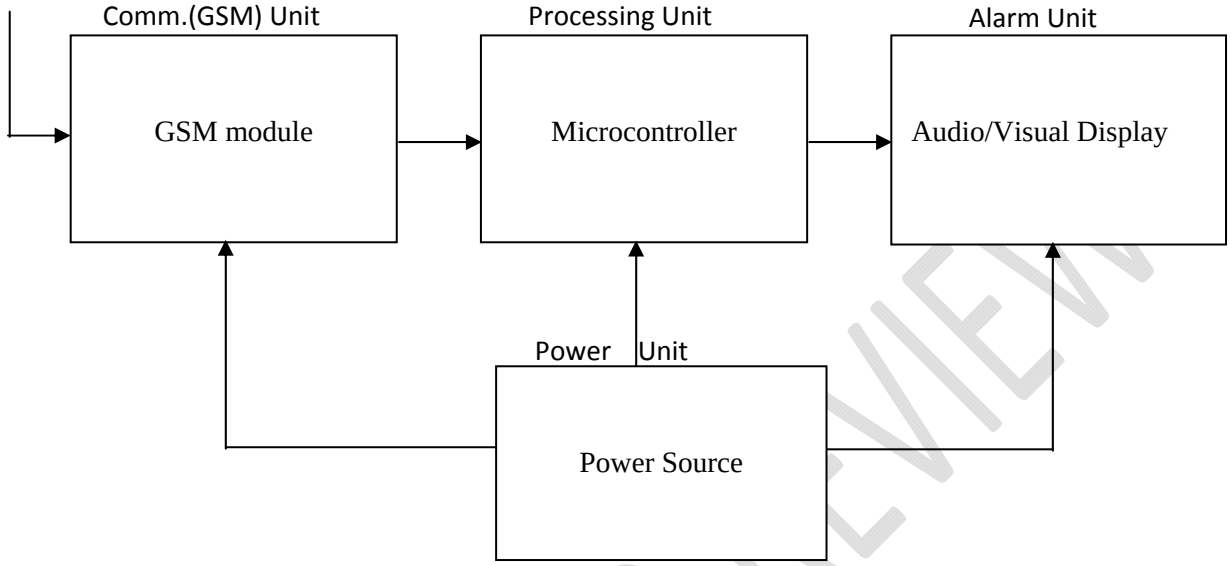

Figure 2: Master sensor node architecture

When the transmitted signal is received in the communication unit, the signal is demodulated in the GSM module (used only as a receiver) and the output is sent to the processing unit. The microcontroller in the processing unit processes the demodulated signal and uses it output to drive both the LCD and the buzzer.

To understand the operation of this network, let us consider the flowcharts given in Figures 3 and 4.

4.3. Field Sensor Flowchart

Figure 3 below presents the flowchart diagram for programming the microcontroller at the field sensor node.

UNDER PEER REVIEW

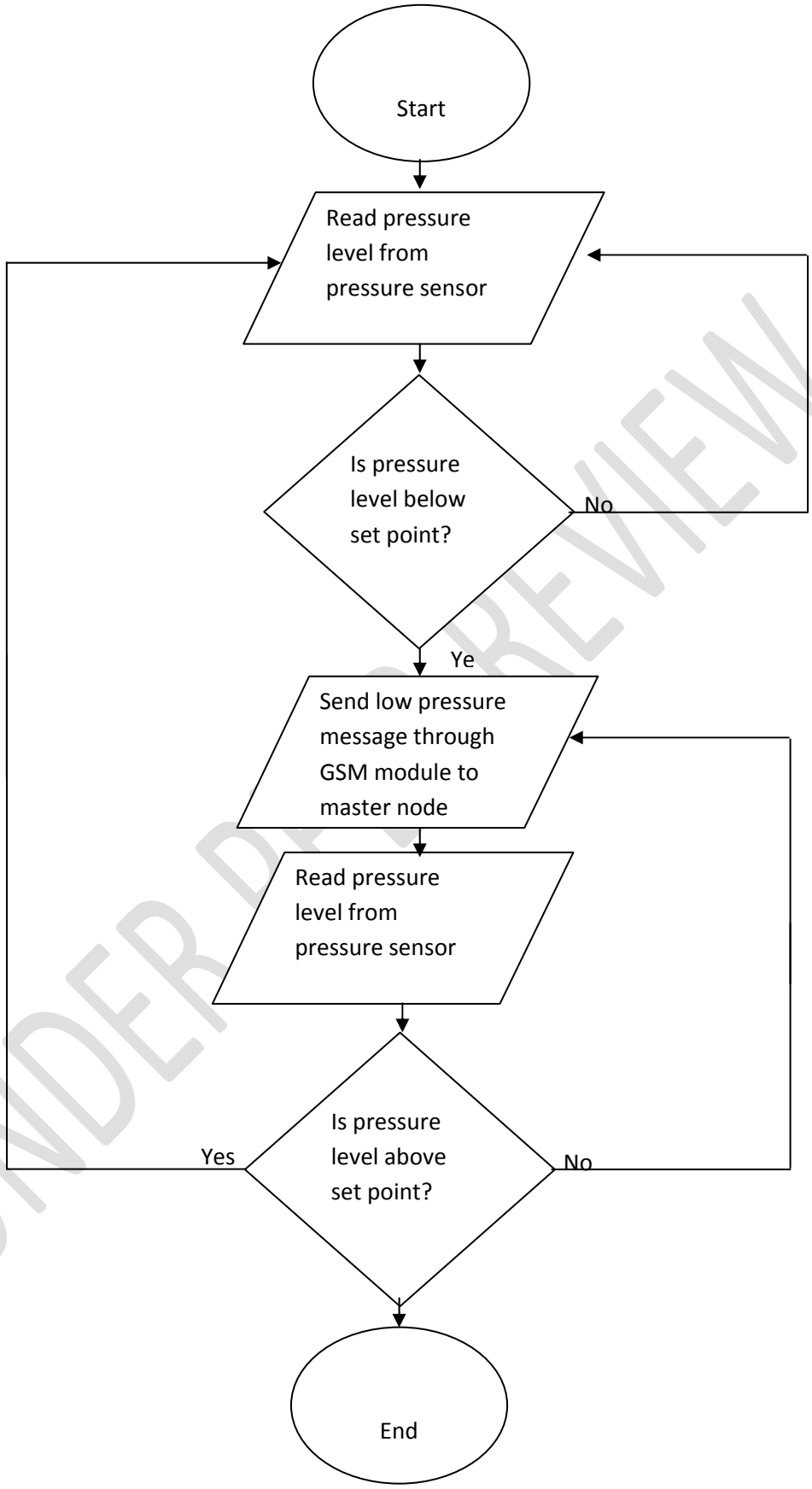

Figure 3: Field Sensor flowchart

UNDER PEER REVIEW

4.4. Master Sensor Flowchart

Figure 4 below gives the flowchart diagram used in programming the microcontroller in master sensor node.

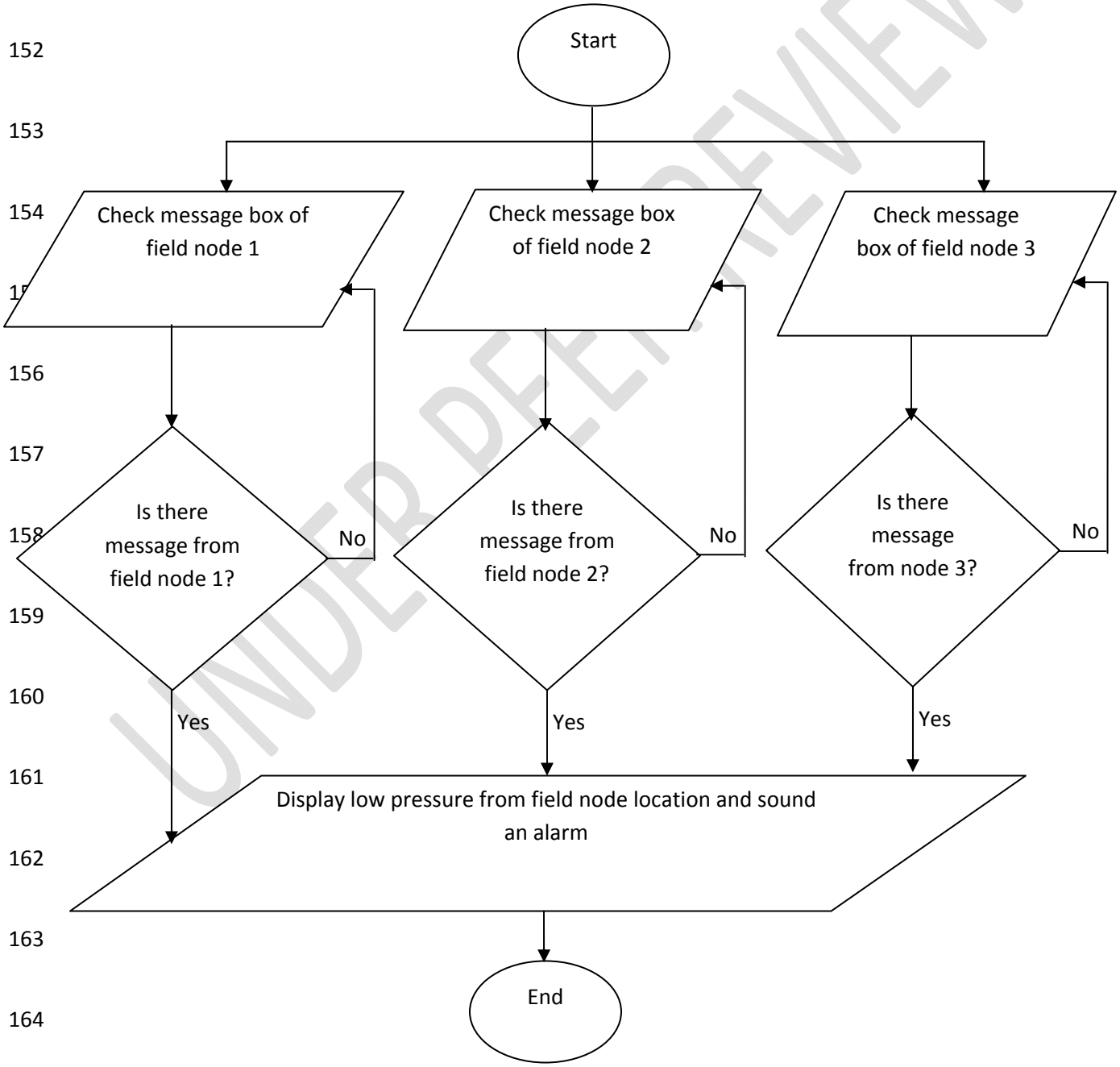

Figure 4: Master Sensor flowchart

UNDER PEER REVIEW

When the network (i.e. both the field and master sensors) is powered, the pressure sensor of the field sensor starts to read pressure values and convert them to voltage data. The analog voltage signal is converted to digital voltage signal and then fed to the microcontroller in the arduino board. The microcontroller processes the information received by comparing the voltage level received with a voltage value stored (corresponding voltage set point) in its memory. See flowchart of Figure 3. When the voltage received by the microcontroller is equal or more than the voltage set point of the microcontroller, no signal is sent to the GSM module. But once the received voltage is below the voltage set point, a signal is sent to the GSM module, where it modulates the carrier signal in the GSM module. The modulated carrier signal is radiated and transmitted as radio waves to the GSM module of the receiving section. In the receiving section, the received radio waves is converted back into electrical signal and processed by the microcontroller in the arduino board of the master sensor. The output signal of the microcontroller is used to drive the LCD and the buzzer. An audiovisual alarm is therefore received by a human monitor who analyses the information received to locate the position of the leak at the field.

4.5. Simulated Circuit Diagram

4.5.1. Transmitting Section (Field Sensor Node)

UNDER PEER REVIEW

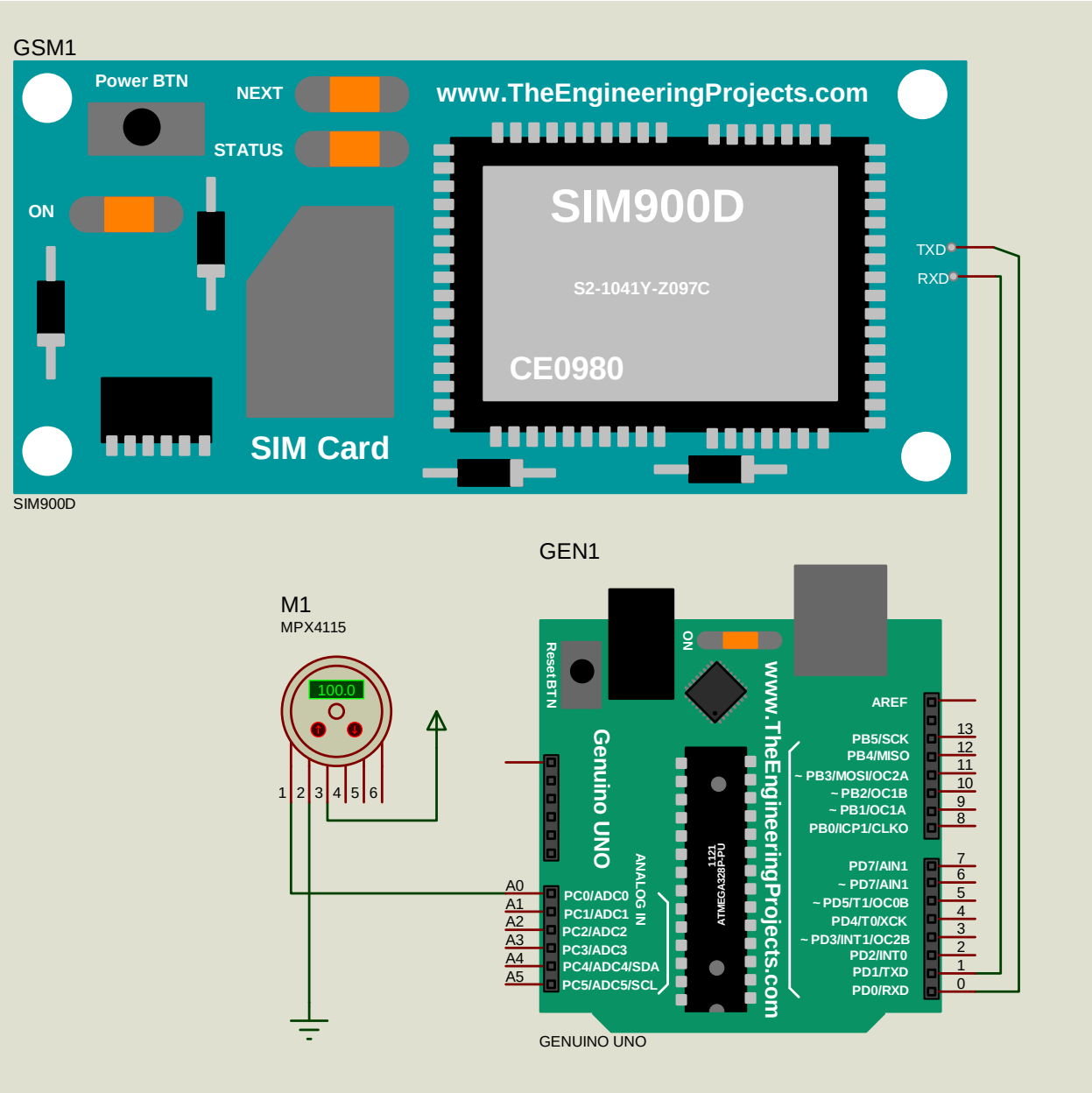

Figure 5: Simulated Circuit Diagram of Transmitting or Field Sensor Section

Note: In this design, the pressure sensor is interfaced to the Arduino microcontroller through the analog pin A0 as shown in Figure 5. Only three wires are used here (1, 2, and 3).The red wire (3) is connected to V_{CC}, the black wire (2) is connected to ground (GND), while the yellow wire (1) is connected to analog pin A0 of the arduino board.

4.5.2. Receiving Section (Master Sensor Node)

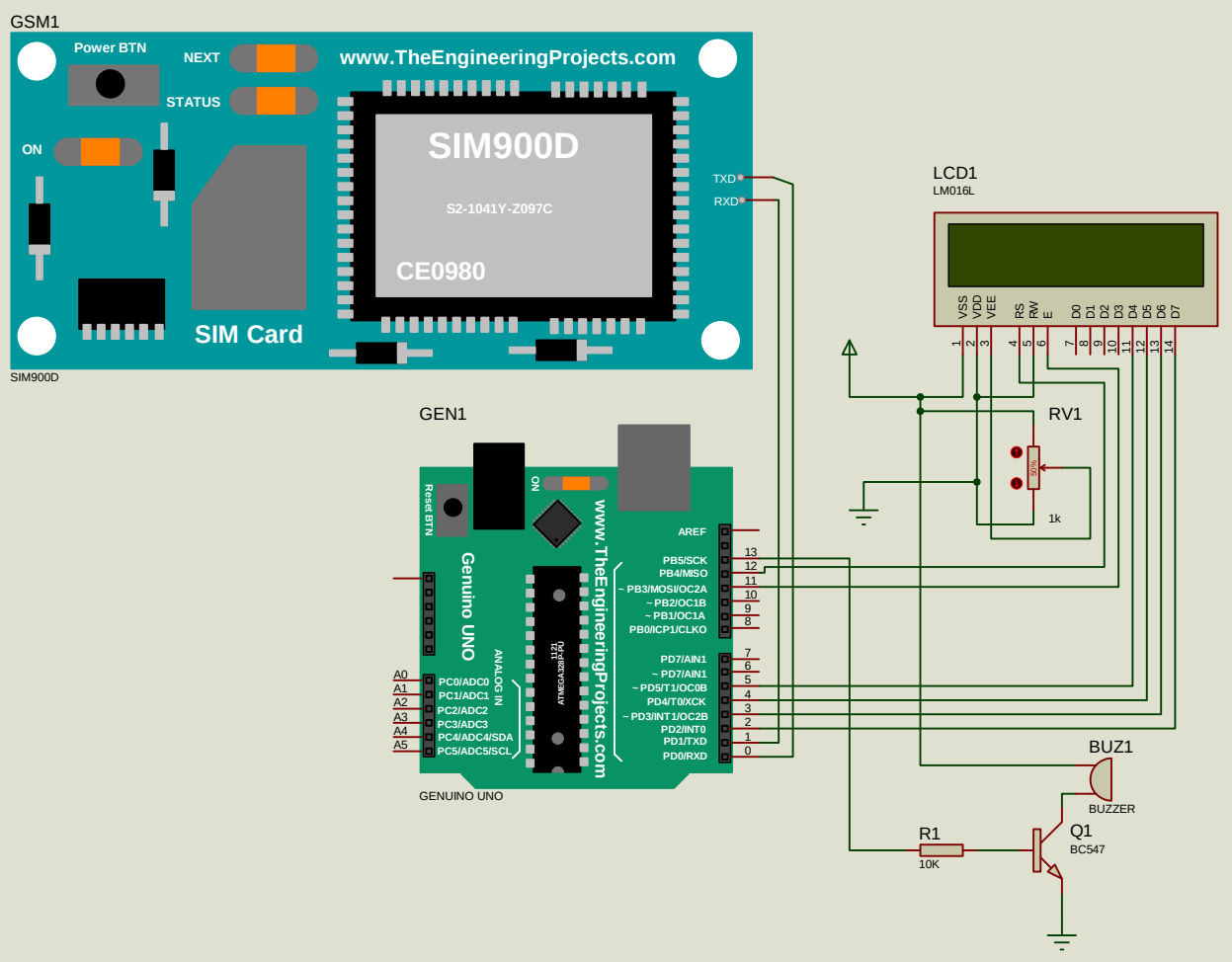

Figure 6: Simulated Circuit Diagram of Receiving or Master Sensor Section

Note: Circuit diagrams were simulated in Arduino Uno environment

5. Result And Discussion

A ‘low pressure at node 1’ information will be displayed on the LCD when a signal is received from field node 1 indicating a leak before field node 1. At the same time an audio alarm will be sounded by the buzzer. In a similar way a ‘low pressure at nodes 2 and 3’ will be received when signals are received from field nodes 2 and 3 and alarm sounded.

6. Conclusion

The purpose of this work was to implement a wireless sensor network that will monitor the pressure variation inside a prototype oil pipeline so as to detect any leakage. To this end, a wireless sensor network that uses pressure variations to detect leak was designed and implemented. Three field sensor nodes and one master sensor node were developed to monitor pressure variations at three designated points and report any reduced pressure below a set pressure point to the master sensor node. The information received at the master sensor node is analyzed for action to be taken. If deployed in Nigeria, the wireless sensor network will be able to monitor oil pipelines against leaks and therefore reduce environmental degradation and economic losses resulting from oil leakages.

UNDER PEER REVIEW

References

Akyildiz,F.I.,Su,W.,Sankarasubramaniam,Y,& Cayirci,E. (2002).Wireless sensor network: A survey. *Journal of Computer Networks*,38 (4),393 – 422.Retrieved on 6th November,2016 from http://www.elsevier.com/locate/comnet.

Bokare, M. & Ralegaonkar, A. (2012). Wireless sensor network: A promising approach for distributed sensing tasks. *Excel Journal of Engineering Technology and Management Science*, 1(1), 1-9.

Buratti,C.,Conti,A.,Dardari,D.,& Verdone,R. (2009).An overview on Wireless Sensor Networks Technology and Evolution.*Sensors*,9,6869 – 6896,doi: 10.3390/s90906869

Liu, Z. & Kleiner, Y. (2012).State-of-the-art review of technologies for pipe structural health monitoring. *IEEE Sens.J.*,12, 1987 – 1992.

Okoli, A.I.C. & Orinya (2013). Oil Vandalism and Nigeria's Security. *Global Journal of Human Social Science, Political Science*, 13(5), 67 -75.

Osunleke, A.S., Gablar, H.A., Inoue, A., Miyazaki, S., & Badmus, I. (2007). Mathematical Modelling Approach to pipeline leaks detection, location, and control. *3rd International Workshop on Computational Intelligence and Applications IEEE SMC, Okayama University*, Japan, 1 – 3.

Misiunas, D., Vitkovsky, J., Olsson, G., Simpson, A., & Lambert, M. (2005). Pipeline break detection using pressure transient monitoring. Journal of Water Resources Planning and Management, 131.

UNDER PEER REVIEW

Nwalozie, G.C. & Azubogu, A.C.O.(2014).Design and implementation of pipeline monitoring system using acceleration-based wireless sensor network. *The International Journal of Engineering and Sciences (IJES)*,3(9),49 – 58.

Nweke, F.H. & Ogbu, N.H.(2015). Wireless sensor networks based pipeline vandalisation and oil spillage monitoring and detection: Main benefits for Nigeria oil and gas sectors.*SIJ Transactions on Computer Science Engineering & its applications (CSEA)*, 3(1), 1-7.

Puccinelli, D. & Haenggi, (2005). Wireless Sensor Networks Application and Challenges of Ubiquitous sensing. *IEEE Circuit and system*, Pp19 -29.

Saini, R.K., Ritika, & Vijay, S. (2017). Data flow in wireless sensor network protocol stack bu using Bellman-Ford routing algorithm. *Bulletin of Electrical Engineering and Informatics*, 6(1), 81-87, DIO: 10.11591/eei.v6i1.577.

Sheikhpour, R., Jabbehdari, S., & Khadem-Zadeh (2011). Comparison of energy efficient clustering protocols in heterogeneous wireless sensor networks. *International Journal of Advanced Science and Technology*, 36, 27-40.

Yuanwei, J. & Ali, E. (2008). Monitoring of Distributed Pipeline Systems by Wireless Sensor Networks. *In Proceedings of the 2008 IJAC-IJME International Conference, Nashville, TN, USA*, 1-10.

Yunana, K., Adewale, O.S., Abdullahi, M.B., & Alfa, A.A. (2017). Pipeline Infrastructure Vandalism Monitoring using Wireless Sensor Networks Technique. *International Journal of Computer Science and Telecommunications*, 8(2), 39 – 42.

UNDER PEER REVIEW