Original Research Article

Development of an Improved Crucible Furnace using Locally Sourced Materials for Teaching and Learning Purposes in Metallurgical Laboratory

ABSTRACT

Technologies have become more affordable and penetrate every aspect of life, even in developing country, like Nigeria. However many of the users in developing countries are still finding difficulty in using the technologies due to lack of experience as they undergo a technological leap. The aim of this research work explores the approach on designing, developing an improved crucible furnace by using our locally sourced materials for teaching and learning purpose in Metallurgical Laboratory. This research was considered in order to eliminate the use of poor heat sources which contaminate the metal being melted in a furnace and also to eliminate the harmful effect of using coal as fuel, by lining the inner wall of the casing with refractory blocks made from heated mixture of kaolin, clay sawdust and water after which the inner pot and electromechanical devices (temperature controller, known as light indicator), were employed in the furnace assembled. During the performance of the equipment it was observed that the furnace has a fast heating rate 61.240c/min to attain a pre-set temperature of 1915^{0}C, and a fuel consumption rate less than 1.4 liters/hr. It has good heat retaining capacity, and can easily be maintained and safe to use.

*Keywords***:** *Contaminates Consumption Crucible, Diesel Fired, Furnace, Performance Temperature.*

1. INTRODUCTION

The name furnace is any device that generates heat, while the word furnace in Latin means Oven. Furnace is a device in which the chemical energy of a fuel or electrical energy is converted into heat [1]. This is then used to raise the temperature of the burden or stock placed within it for melting or smelting. Therefore, furnaces operating at low temperature are called Ovens depending on their purposes, furnaces was first excavated in one of the sites of Indus valley civilization at Balakot, at that time it was mostly used for manufacturing of ceramic objects.

National development anchors on the ability to advance technologically through harnessing and converting useful mineral resources into required products [2]. The development is challenging, thus there is need to look inward and locally develop crucible furnace that will be use for melting non-ferrous scraps metals in, the Nigerian Automobile and Electricity generation industries stand to benefit most from this research effort.

Interestingly, we can commonly classify a furnaces by the three methods used for removal of the metal from the crucible.

a. **The tilling pot:** This is where you would mechanically tilt the crucible to the mould that is the entire furnace is tilted to pour out the molten metal directly into the ladle or moulds.

b. **The lift out pot:** Lifting it out then pouring it into the mould, that is to say that it consist of a pot that can be lifted out of the furnace by means of a tongs for pouring.
c. **Bale out/stationary pot:** It ladled the metal out to the mould, which is the simplest form of crucible furnace. The molten metal is ladle out directly for casting.

The American or Canadian named any heating system furnace, be it household heaters that are used in our homes or the word kiln that is used in moulding ceramic objects. Furnace is the most important equipment used in the foundry industry [3]. Furnace is mostly used in many operations such as extraction of metal from ore, chemical plants and oil refineries for fractional distillation, in the industries and home for making steel and heat treating of materials for the purpose of changing their molecular structures [4]. It is needful to develop furnaces requiring other sources of energy rather than electricity in developing countries where electricity supply is not consistent [5]. It is possible to develop a diesel fuel fired crucible with air/fuel ratio of 400:1 [6]. Govardhan et al, [7] considered a furnace fired with diesel of which the research work lacked physical validation but the computer based experimentation and computational fluid dynamics (CFD) analysis showed the temperature distribution during the oscillating combination in a crucible furnace.

Crucible furnace is one of the oldest and simplest types of melting furnace unit in the foundry. The furnaces use a refractory crucible which contains the metal charge. The charge is heated via conduction of heat through the wall of the crucible. The heating fuel is typically coke, oil, gas or electricity. Crucible melting is commonly used where small datches of low melting point alloy are required. The capital outlay of these furnaces makes their attraction to small non-ferrous foundries. Melting of metals is one basic industrial practices in production of engineering products [8].

Therefore, crucible is container that can withstand very high temperatures and it is use to melt materials such as metals. Its charge is heated using conduction through the walls of the crucible, which is usually fueled by coke, oil, gas or electricity.

Fueling the furnace to generate the required heat energy can be accomplished in various ways, which includes use of fossil fuel, by electricity in the electric arc furnace, or induction heating for induction furnaces depending on their types [9]

Central heating with a furnace is an idea that has lasted for centuries. One of the earliest forms of this was invested by the Romans and called a hypocaust. It was a form of under-floor heating using a fire in one corner of a basement with the exhaust vented through flues in the walls to chimney. This form of heating could only be used in stone or brick homes, it is very dangerous practice because of its possibility of fire out break and suffocation.Furnace generates heat by burning fuel, but early furnaces burn wood. In the seventeeth century coal began to replace wood as a primary fuel.

Coal was used until the early 1940s when gas became the primary fuel. In the 1970s, electric furnace started to replace gas furnace because of the energy crisis. Today, the gas furnace is still the most popular form of home heating equipment.

Wood and coal burning furnaces required constant feeding to maintain warmth in the home. From early morning to late at night, usually three to five times a day, fuel is needed to be added in the furnace. In addition, the waste which is the ashes, from the burnt wood or coal must be removed and disposed.

Today's modern furnace uses stainless steel, aluminized steel, aluminum brass, copper, and fiberglass. Stainless steel is used in the heat exchanger for corrosion resistance. Aluminized steel is used to construct the frame of blowers and burners. Brass is used for valves, and cooper in the electrical wiring. Fiberglass is used as insulating materials in ceramic industrial to insulate the heating cabinet [10]. Also refractory bricks and glass wool can be used as insulating materials in furnace [11, 12]

The original gas furnace consists of heat exchanger, burner, gas control valve, and an external thermostat, and there was no blower. Natural convection or forced air flow was used to circulate the air through large heating ducts and cold air returns to and from each room. This system was very inefficient-allowing over half of the heat air to escape up the chimney.

Today's gas furnace consists of a heat exchanger, secondary heat exchanger (depending on efficiency rating), air circulation blower, flue draft blower, gas control valve, burners, pilot light or spark ignition, electronic control circuitry, and an external thermostat. The modern furnace is highly efficient 80-90% allowing only 10-20% of the heated air to escape up the chimney.

When heat is required, setting the thermostat allows the burners to light and throws heat into the primary heat exchanger. The heated air then flows through the secondary heat exchanger (90% efficient furnace only) to the exhaust flue and chimney [10].

There are many types of furnace such as household furnace, industrial process furnace which are blast furnace, central warm furnace, floor, wall or pipeline furnace, rotator furnace, custom heat treat furnace. A household furnace is a permanently installed furnace which is used to provide heat to an interior space through any one of these intermediary fluids such as air, steam or hot water. In this type of furnace, the most commonly used fuel source in natural gas. Other fuel sources that may also be used include Liquefied Petroleum Gas (LPG), fuel oil, coal or wood. Also sometimes electricity resistance heating can be used as a source of heat when cost of electricity is low. Blast furnace is the metallurgical furnace type that is used for smelting process to produce metals such as iron. The fuel and oil are poured from the top of the furnace while the air or oxygen to be more specific is blown in the bottom of the chamber in the furnace and a chemical reaction takes place.

A central warm air furnace is a type of space heating equipment having a central combustor or resistance which uses a gas, fuel oil or electricity and generates warm air that circulates through a variety of ducts that goes to various rooms. Another space heating equipment which consist of ductless or resistance unit is a floor, wall or pipe less furnace. They have an enclosed chamber where fuel bums or the electrical resistance heat is produced. The heat warms different rooms of the building. A rotator furnace is designed for the processing of granular, powder or participate aggregates continuously under controlled atmospheres and temperature condition.

A broader category of furnace is incinerating furnace. They can be put into industrial furnace category due to the design and types of fuels used in them, which are much like the industrial furnace. But a separate category is made because they are not in the production process.

This research is aimed at designing of a simple low cost diesel oil fired foundry, which can be adopted in the melting of non-ferrous metal, or jewelry works, so as to eliminate both harmful and impurities caused by using charcoal as a fuel.
The furnace is perfect for hobbyists, small and medium industries, institution of learning, vocational colleges and schools.

The produced crucible furnace is portable and environmentally friendly. The internal temperature can easily be controlled and measured.

The design of diesel burner and diesel storage tank were considered. Also implementation of thermocouple temperature readout was considered.

This research work is limited to the design of a portable diesel burner crucible furnace. This does not include the test for the various temperature that may be needed to melt

various non- ferrous metals, nor involving techniques in casting or heat treatment but will have a means to know the inner temperature.

DESIGN METHODOLOGY

Materials and Methods

An improved crucible furnace using locally sourced materials for teaching and learning purposes was developed for usage in metallurgical laboratory, the material choosed are cost effective, available and suitable for the working condition. The materials used for the development of the blacksmith's hearth were choosed based on improved efficiency, uniform heating, and minimum heat losses. The material used in the development was chosen base on their availability, suitability and cost.

a. **The Forge Frame:** Mild steel angle bar of 50mm x 50mm x2mm was used to construct the frame, which is the main support of the forge that carries the whole load of the forge comprising the weight of the forge housing, the diesel burner and the weight of the refractory material inside the forge housing. Mild steel angle bar was selected over other materials because of its strength, availability and low cost.

b. **The Forge Housing or Casing:** Mild steel sheet of 2mm thickness were used in order to get the required geometry and dimensions of the forge housing. The selection criteria favour this grade of mild steel because of its ability to be formed into different shapes coupled with its ability to retain these shapes in service.

c. **Diesel burner:** The diesel burner system (with rating 230V-50Hz-336W-IP44) was mounted on the diesel burner support which was bolted to the support using M13 bolt, making the nozzle of the diesel burner to enter the 9cm diameter hole made on the forge housing body.

d. **Refractory Materials/Liners:** A refractory material was a homemade mixture consisting of the following ingredients:

- **Port land cement** - 1 part by volume
- **Clay** - 1 part by volume
- **Perlite** - 7 part by volume
- **Silica sand** - 1 part by volume

where used to line the forge housing and roofing to prevent loss of heat. They were used based on their properties. The perlite can expand and becomes porous when heated about 850°-900°C to about 4 to 20 times its original volume due to the presence of 2 to 5% combined water. The clay is used because of its heat resistance ability, plasticity and of high strength. The Portland cement serves a purpose of binding these materials together.

e. **Diesel:** Diesel which is the fuel used, was used because it hardly contaminate the molten metal inside the crucible during combustion. It was equally used because it would provide the required amount of heat energy needed to melt non-ferrous metals and it is relatively cheap.

f. **Thermocouple:** The thermocouple chosen for this project was tungsten. It is widely used for the long term and short-term measurement of temperature up to 2000°C in neutral atmosphere or reducing atmosphere. It was used in order to measure the inner temperature of the forge.

g. **Digital Thermo Controller:** A digital thermo controller that can read or detect temperature more than 2000°C was used.

h. **Voltage Regulator:** A 1000VA power, input 100v-260v with an output voltage of 220v voltage regulator was used to regulate the flow of current passing to the diesel burner.

DEVELOPMENT PROCESS

Developmental procedure involves in the producing of the blacksmith hearth and steps includes:

Marking out and Cutting of Materials

The measurement and cutting of materials to required sizes to get the shape of the forge where taking into consideration using the mild steel 2400mm x 120mm x 2mm, a

rectangular shape with dimensions of 1602mm x 510mm was marked out starting from the edge of the sheet metal for the forge housing, then a circular shape of 255mm radius was marked out on the sheet also for the bottom of the forge roof in addition with a rectangle of 1728mm x 60mm dimension was marked out for the forge roof thickness, then, the marked portions were cut out using filling machine with cutter stone to obtain the desired shapes. Furthermore, 5400mm x 50mm with 3mm thickness mild steel angle bar was marked three places of 350mm length cut-off using hand hack saw for the forge housing/casing support.

On the same angle bar, a 150mm length was marked into another three places and was cut-off still using a hand hack-saw for enhancing the support of the forge housing support. Again, a 520mm length was marked on the remaining angle bar into three places and was cut-off using hand hack-saw which will serve as the beam/rail for the forge housing supports.

Three cross members of 570mm which was marked into two places and 275mm was also marked on the left over angle bar and was cut-off. On another angle bar of same dimension, dimension of 480mm, 580mm, 300mm 250mm (2 parts) and 180mm (2 parts) was marked and cut-out for the diesel burner support. Still on the same angle bar, a 750mm length ws marked into two places and was cut-off in addition with a mild steel pipe, 555mm length with a diameter of 350mm was also marked and cut-off for the forge roof handle. 158mm length of the angle bar was marked into four places and two 355mm length of mild steel pipe, 350 in diameter was also marked and cut-off for the forge housing/handle. A tapered mild steel pipe of 300m length with diameters 30mm and 25mm was used for the tuyere.

A 200mm length of mild steel pipe which is 15mm in diameter was used for the chimney. A reinforcement rod of length 152.4mm and 12.5mm diameter was marked and cut out from a 2000mm length reinforcement rod for the forge housing protector.

Grinding and Smoothening

This was carried out to improve the appearance of the crucible furnace by using grinding stone fixed in the filling machine. It was done to check whether there are under cuts in the welded joints and every undercut detected was welded to avoid failure.

Lining of the Forge Housing Walls with Refractory Materials

Before the lining process began, screw nails was randomly welded on the forge housing which served as reinforcement for the refractory materials. The refractory materials was achieve with a mixture or Portland cement, clay, silica sand and perlite in the ratio of 1:1:1:7. Before the refractory laying, a skeletal structures (cylindrical) with diameter 110mm and a height of 100mm was constructed and placed at the centre of the base of the forge housing, this was used to hold refractory materials, its compartment and for the system not to be blocked. The part to be lined at the base was wetted with water and the refractory material was laid to a height of 100mm. Later on, another skeletal structure (cylindrical) with diameter 300mm and a height of 410mm was also constructed and placed at the centre onto the laid liner. Then the forge housing walls was wetted with water and the refractory material was rendered onto the walls of the forge housing using a hand trowel and it was properly rammed.

The roof was first lined with the refractory material at a thickness of 50mm, and a skeletal structure (cylindrical) with diameter 280mm and height 35cm which was placed at the centre-base of the first roof liner and the refractory material was also rendered onto it carefully and the refractory surface was obtained.

Pre-Treatment of Non-Ferrous Metals (Aluminum Scrap)

The pre-treatment process was done to obtain clean aluminum scraps with little sizes to reduce the volume that can be contained in the crucible and good quality of aluminum produced after melting. The process includes:

a. **Selection of Aluminum Scrap:** Components or parts containing aluminum as base metal should be selected to obtained high/good quality of aluminum produced.
b. **Cutting of Scraps into Small Size:** The aluminum scraps which sometimes come bulk were cut into little sizes to reduce the volume it can occupy inside the crucible, thereby increasing the quantity of aluminum scraps that can be contained inside the crucible.
c. **Washing/Cleaning:** The aluminum scraps are cleaned either by washing with water or use of chemicals to avoid impunities.

Operation of the Blacksmith's Hearth (Forge)

After pre-treatment of the aluminum scraps, the scraps are loaded into the crucible, care is taken to load the aluminum scrap into the crucible. The crucible containing the scraps is laid into the hearth, the diesel burner is ignited. The forge is then covered with the roof and the thermo controller activated. When the melting points of the aluminum is reached. The scraps melt and the roof can be taken off to be checked.

The heat can be controlled by adjusting the voltage regulator which is a necessity when heat treatment practice is carried out with the forge. The operation of the forge is of batch process i.e. a certain quality of aluminum scrap is loaded into the crucible and melted after which another quantity of scrap is loaded.

The forge housing must be able to have enough strength to withstand straining action, thermal and mechanical distortion.

Space being considered in designing the forge housing, the volume of the forge housing can be determined by treating it as a uniform cylindrical shell/bucket with one end closed.

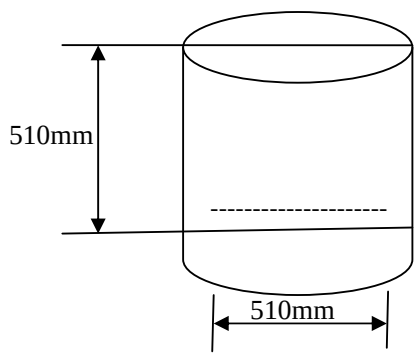

Fig 1: Cylindrical shell/bucket

The volume of the forge housing is given by; Volume = $\pi r^2 h$

Where r = radius of the uniform cylindrical shell bucket

$r = {}^{D}/_{2} = {}^{510}/_{2} = 255mm$

h = height of the cylindrical shell bucket = 510mm

π =3.142

Substituting, Volume = $3.142 \times (255)^2 \times 510$

$= 3.142 \times 65025 \times 510$

$= 104197360.5mm^3$

$= 0.1042m^3$

The volume of the forge combustion chamber with 100mm thickness is $0.0838m^3$.

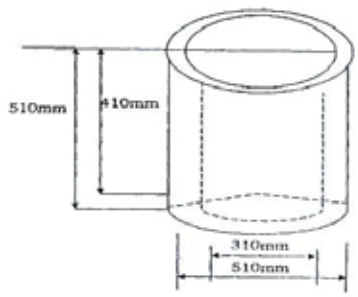

Fig. 2 Cylindrical Forge Combustion Chamber

Where r -= radius of the forge combustion chamber
r = $^{D}/_{2}$ = $^{510}/_{2}$ = 255mm
h = height of the forge combustion chamber = 410mm
π = 3.142
Substituting =
Volume = 3.142 x $(255)^2$ x 410
= 3.142 x65025 x 410
= 83766505.5mm^3
= 0.0838m^3

The Forge Roof: The forge roof is a cylindrical plate which is properly lined with refractory material with a rectangular shape constructed handle. The main function of the forge roof is to provide an effective heat sealing with the forge housing. It also made provision for the forge chimney.

The area of the forge roof can be determined as follows:
The surface area of the circular cylinder
S = 2nr (h+r)
Where r = radius of the circular cylinder
r = $^{D}/_{2}$ = $^{550}/_{2}$ = 275mm
h = height of the circular cylinder = 52mm
π = 3.142
Substituting =
S = 2x3.143.142 x 275 (52+275)
= 1728. 1x327
= 1728. 1x327
= 565088.7mm^2
Area of the chimney, A = π dl
Where d = diameter of chimney opening = 20mm,
π = 3.142 and L = length of pipe = 150mm,
A = 3.142 x 20 x 150 = 9426mm^2
Surface area of the circular tube handle
S = π dl
Where d = diameter of the circular tube = 30mm
L = length of the tube = 550mm,
Substituting =
S = 3.142 x 30 x 550
= 51843mm^2
Area of the rectangular handle = length x width
Substituting = 750 x 50 = 37500mm^2
Therefore Total area of the forge roof =
Surface area of the circular cylinder + surface area of the chimney + 2 (surface area of circular tube/pipe handle) + 4 area of the rectangular handle.
= 2055. 1 + 9426 + 2 (51843) + 4 (37500),
= 2055. 1 + 9426 + 103686 + 150000 2.65167.1mm^2
=0.2652m^2

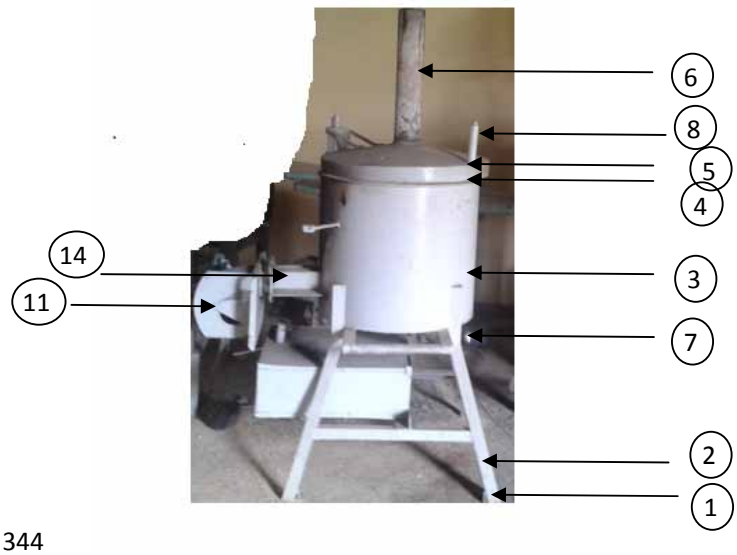

Fig. 3: Crucible furnace

S/NO	DESCRIPTION	QTY	MATERIALS
1	Cylindrical shell stand base	4	Mild steel plate
2	Cylindrical shell stand	4	Rectangular steel pipe
3	Cylindrical shell	1	Mild steel plate
4	Cylindrical shell cover	1	Mild steel plate
5	Cover cylindrical shell	1	Mild steel plate
6	Chimney	1	Mild steel pipe
7	Burner Assembly	1	Mild steel pipe
8	Cylindrical Cover Handle	1	Mild steel Rod
9	Fuel Hose	-	Rubber
10	Fuel Tank	-	Steel
11	Power Control Box	1	Mild steel plate
12	Fuel Regulator	1	Brass
13	Air Regulator	1	Plastic
14	Electric Motor	1	
15	Bolts Hand	6	Steel
16	Fuel inlet	1	Mild steel pipe

Design Analysis and Geometrical Parameter

Heat transfer is the thermal energy in transit due to a spatial denatures difference. During the operation of the blacksmith's hearth, energy is lost from furnace as heat. Hence, these were the calculation that was considered in designing the blacksmith's hearth to make sure that the forge melts non-ferrous metals (aluminum scraps) and they test the effectiveness of the forge.

Burning of Diesel Oil

Combustion is the reaction of substances with oxygen with the evolution of heat and light. Since diesel is an impure hydrocarbon, it often burns incompletely producing some carbon monoxide (CO).

The combustion equation is

$4C_{12}H_{23} + 710_2$ -------- » $48CO_2 + 46H_2O$

Design Calculations of a Crucible Furnace Maximum Mass of Change Materials

The mass of the non-ferrous metal (aluminum) that can be held in the crucible is obtained by taking into consideration the interior of the crucible.

The interior dimensions of the crucible are given as:

Inner interior diameter of the crucible D = 100mm = 0.1m

Inner radius of the crucible R = $^{D}/_{2}$ = $^{0.1}/_{2}$ = 0.05

Height/depth of the crucible H =90mm = 0.09m

Density of aluminum P = 2700kg/m^3

π = 3.142

Hence, volume of the cylinder (crucible)

V = π. r^2. H

We know that **density of aluminum** = $\frac{Mass\ of\ aluminum}{volume\ of\ crucible}$

Therefore mass of aluminum = density X volume of the crucible

Calculation for Heat Generated by the Combustion of Fuel (Diesel Oil) and Air per Unit Time inside the Forge Crucible Furnace

The quantity of heat is a measure of the amount of heat that is present. The formula of quantity of heat Q is equal to the mass of substance M, multiplied with the specific heat and the change in temperature dt.

Mathematically =

Q = M.C_p. dT

But m = pV (density x volume)

And dT = change in temperature (T_1 - T_o)

Therefore, Q = pVC_p (T_1 - T_o)

Where, Density of diesel *p* = 832kg/m^3

Volume of the forge furnace interior V = 0.0391m^3

Specific heat of chemical G = 1kJ/kg^{o}C

Maximum temperature generated T_1 =1915°C

Room temperature T_o = 30°C

Calculation for Heat Required To Melting Charge (Aluminum Scrap) Heat Required to Raise the Temperature From 30°C to 800°C

In order to obtain enough fluidity of the molten required for casting and an additional temperature to compensate for temperature drop when charge flows into furnace must attain a temperature, higher than the metal desired to melt (chosen temperature = 800°C)

The quantity of heat required for this, is given as:

Q = pv (C_s (T_A-T_o) + hf_o + C_s (T_p – T_A)

Where

Density of aluminum *p* =2700kg/m^3

Volume of the crucible V = 0.0071m^3

Specific heat of aluminum C_s = 0.896/kg^{o}C

Melting point of aluminum T_A = 660°C

Latent heat of fusion of aluminum hf_o = 398kj/kg

Pouring temperature T_p = 800°C

Room temperature T_o =30°C

Therefore Substituting for Q

Q = 2099.69kj

Determination of the Thermal Conductivity and Thermal Resistivity of the Locally Made Refractive Material (K_{rh})

Thermal Conductivity

Thermal conductivity is the quantity of heat transmitted through a unit thickness in a direction normal to a surface of unit area due to unit temperature gradient under steady state condition.

From Fourier's heat equation in one dimension

$$\frac{Q = T1 - To}{RT}$$

Where

Q is the quantity of heat transferred in kj from inside of the forge furnace to outside environment.

T_1 is the maximum temperature inside the forge furnace

T_o is the room temperature

Where R = LKA is thermal resistance

The thermal resistance R increases as L increases, as A decreases and as K decreases.

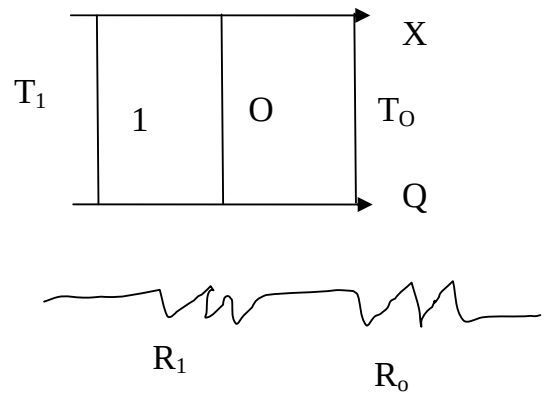

Heat transfer across a composite scab

Hence, R_T $R_B + R_R$

Where, R_B is the resistance offered by the body of forge.

R_R is the resistance offered by the roof

$SB = \frac{LsB}{KsB\ AsB} + \frac{LRB}{KRB\ ARB}$

Where LSB and LRB are the respective thickness of the forge housing and refractory material.

KSB and KRM are the respective thermal conductivity of the forge housing (mild steel) and refractory material.

ASB and ARB are the respective areas of the forge housing and refractory material.

Also R_R $\frac{\text{LSR}}{\text{KSR ASR}} + \frac{\text{LRR}}{\text{KRM ARR}}$

Where LSR and LRR are the respective thickness of the forge housing and refractory material. ASR and ARR are the respective areas of the forge housing and refractory materials on the roof.

LSR =2mm = 0.002m

LRB = 100mm = O.1m

LSR = 2mm = 0.002m

LRR = 90mm = 0.09m

LSB = 55W/M^{o}K

KRM = unknown

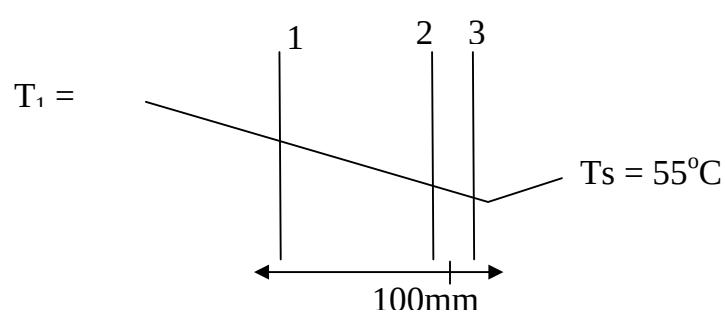

Area of the forge housing equals area of the refractory material on the forge body.

= Π r (h+r)

Diameter of the forge housing (interior) = 510mm = 0.51m

L = length of pipe = 150mm = 0.15m
Therefore area of the forge roof = 0.565 – 0.009426
$ASR = ARR = 0.55m^2$
Resistance of the body of the forge furnace
$R_B \quad \frac{LSB}{KSB\ ASB} + \frac{LRB}{KRM}$ (2)
Resistance of the roof $R_R \quad \frac{LSB}{KSB\ ASR} + \frac{LRB}{KRM\ ARR}$

Total resistance offered by the forge
RT = Ra + RR
Equation one plus equation two
$R_T = 0.000031 + \frac{0.1}{1.18KRM} \quad 0.000065 + \frac{0.09}{0.556KRM}$ (3)
We know that Fourier's heat equation in on dimension (4)
$\frac{T1 - T3}{RT}$
T_1 = Temperature inside the forge furnace = 1915°C
T_3 = Temperature inside the forge furnace = 55°C
R_T = Total thermal resistance
Substituting for R_T and Q into (4)
$\frac{\frac{15330}{0.000096KRM+0.247}}{KRM} = \frac{\frac{1915-55}{0.000096KRM+0.247}}{KRM}$
61321.3 (0.000096KRM + 0.247) = 1860KRM
1.472KRM + 3786.51 = 1860KRM
1860KRM – 1.472KRM = 3786.51
1858.52KRM = 3786.51
$KRM = \frac{3786.51}{1858.528}$
$KRM = 2.04W/M^ok$
Therefore the thermal conductivity (K) of the locally made refractory material is 2.04W/M°k.

Thermal Resistivity

Thermal resistance is a heat property and a measurement of a temperature difference by which an object or material resist a heat flow. Thermal resistivity is a reciprocal of the thermal conductivity.

$R = \frac{1}{K}$
Hence $R_T \frac{1}{KRM} = \frac{1}{2.04}$ 0.49m°k/W
The thermal resistivity of the locally made refractory material is 0.49m°k/W.

Determination of the Heat Loss per Unit Time By Conduction

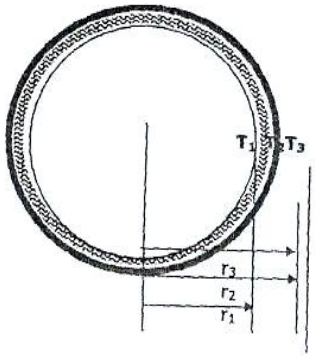

Fig. 4 Cylindrical Surface of the Refractory Material

Overall diameter D_3 = 550mm = 0.55m

Radius $r_3 = \frac{0.55}{2}$ = 0.27m

Diameter D_1 510mm = 0.52m

Radius $r_3 = \frac{0.51}{2}$ = 0.255m

Diameter D_1 310mm = 0.31m

Radius $r_1 = \frac{0.31}{2}$ = 0.155m

Thickness of the refractory material L M = 100mm = 0.1m

Thickness of the mild steel is = 2mm = 0.002m

Length of the forge furnace L = 510mm = 0.51m

Thermal conductivity of the refractory material KRM = 2.04 W/W^{o}K

Thermal conductivity of the mild steel KMS = 55 W/M^{o}K using the equation

Q = $2\pi(T_1\ T_2)$

$= + \frac{\mathrm{In(r3\ r2)}}{KRM} + \frac{\mathrm{In(r3\ r2)}}{KMS}$

Where T_1 = inside surface temperature = 1915°C

T_3 = outside surface temperature = 55°C

Calculating the heat loss per sec.

Total heat loss per m^2 of the inner surface

Total inner area = Area of the forge furnace

Body + Area of the roof + area of chimney.

Time required to raise the Temperature from 270°c to 800°c

This is the heating time of the furnace, which is one of the basic design criteria that must be met. It is the required to heat the aluminum scrap from ambient room temperature of 270°C to 800°C in forger furnace capable of attaining 1915°C using the equation.

$\frac{\mathrm{T-T1}}{To}$ f-h.A.t/pcv

Where,

Density of aluminum scrap p=2700kg/m^3

Initial temperature of aluminum scrap T_o = 27°C.

Maximum temperature of forge furnace T_1 = 1915°C.

Time required to reach temperature T= t

Specific heat capacity of aluminum C = 900J/kJ^{o}C.

Area of the forge furnace i.e. unlined.

Volume of the unlined part of the forge heat transfer coefficient of aluminum

h = 75W/m^{o}C

Area = 2Πr(r+h)

Where h is the height forge furnace = 410mm

= 0.41m

Diameter of forge furnace D (unlined) = 310mm

= 0.31m

Radius r = $\frac{0.31}{2}$ = 0.155m

Area = 2x3.142x0.155(0.155+0.41)

Volume = $\Pi r^2 h$

Substituting =

$\frac{800-1915}{27-1915}$ = (-75 x 0.55 xt) / (2700 x 900 x 0.03091)

t = $\frac{0.526}{0.000549}$

Determination of Heat Transfers and calculation of Heat Transfer to the Charge through Condition

Heat transfer takes place as condition if there is a temperature gradient in a solid or fluid. Energy is transferred from more energetic to less energetic molecules when neighboring molecules collide. Conductive heat flow occur in direction of the decreasing temperature are associated with higher molecular energy.

Fourier's law express, conductive heat transfer as

$Q = \frac{K.A.dT.}{L} \quad \frac{KA\ (T1-T)}{L}$

Where Q = heat transfer

A= heat transfer area = $0.044m^2$

K = thermal conductivity of material (Mild steel = $55W/m^ok$

$T_1$is maximum temperature of forge furnace

= 1915^oC = 2188k T_2 is the melting point of aluminum = 660^oC

L = thickness of the crucible = 6mm = 0.006m

Substituting =

$Q = \frac{55X0.044\ (2188-933)}{0.006}$

Calculation of Heat Transfer to the Charge Through Radiation

Radiation heat transfer is the transfer of heat energy by electromagnetic radiation. Radiation operates independently of the medium through which it occur and depends upon the relative temperatures, geometric arrangements and surface structures of the materials that are emitting or absorbing heat. In this case the net heat transferred from the hotter to the cooler surface is given by

$Q = AC\ a\ (V_1^4 - T_2^4)$

Where $\frac{1}{C} = \frac{1}{ei} + \frac{1}{e2}$ -1

B_1 is the emissivity of the surface at temperature T_1 = 0.05

e_2 is the emissivity of the surface at temperature T_2 = 0.05

T_1 is the maximum temperature of the forge chamber

T_2 is the melting point of aluminum = 6.60^oC = 933k

S is Sefan Boltzman's constant = $5.67 \times 10^{-8}\ Jm^{-2}\ S^{-1}\ K^{-4}$

Area of the crucible = 2nr (h+r)

Radius of the crucible = 50mm = 0.05

Height of crucible = 90mm = 0.09m

Area = 2 x3.142 x 0.05 (0.09 +0.05)

Where $\frac{1}{C} \quad \frac{1}{0.05} + \frac{1}{0.05}$ -1

NOTE:

Emissivities vary with the temperature T and the wave length of the radiation emitted. For many purpose, it is sufficient to assume that for:

a. A dull black surface (lamp-black) emissivity is approximately 1.
b. Surface such as paper/painted metal/wood and including most foods, emissivities are about 0.9.
c. Rough unpolished metal surfaces, emissivities vary from 0.7 to 0.25.
d. Polished metal surfaces, emissivities are about or below 0.05.

Thermal efficiency of the blacksmiths heart (forge)

The thermal efficiency of the blacksmith hearth is given as:

Thermal efficiency n= $\frac{heat\ output}{heat\ input}$

$= \frac{heat\ generated - Heat\ loss}{heat\ \ generated}$

$= 1 - \frac{Heat\ loss}{Heat\ generated}$

RESULTS AND DISCUSSION

Taking into consideration and safety requirement for the developed crucible furnace the under mentioned test were conducted.

TESTING

a. **Thermal Conductivity:** This test was conducted to ensure that the refractory materials used for the liner was able to conduct less heat generated in the combustion hence preventing much heat transfer to the environment.
b. **Operation of Diesel burner Speed Controller:** When electric current was pass through the electrical turned clockwise and anticlockwise and it responded positively indicating that the diesel burner speed can be regulated.

c. **Operation of the Thermocouple and the Digital Thermo controller:** After igniting the fuel inside the forge, as the fire burns hotter, the digital thermo controller began to display different values of temperature and the thermocouple and thermo controller was found to be in good working condition.

d. **Melting of Aluminum Scraps:** The test was carried out by heating the aluminum scraps inside the crucible in the forge will be able to melt non-ferrous metal and the result was positive. All the components were found to be in good working condition and the forge performed satisfactorily.

DISCUSSION

It was observed that the developed crucible furnace has a fast heating rate (61.240C/min to attain a pre-set temperature of 1915°C) and very good fuel economy- consuming less than 1.41 litres/hr. The developed furnace will contribute in waste management as used cans and metal scraps will be melted and serve as available raw material for local small and medium industries in the country. This will boost industrial development and create more job opportunities.

It was also observed that the furnace has good heat retaining capacity, can be easily maintained and is safe for use. In other to achieve the basic engineering design parameters and value engineering analysis through the principles of thermodynamic, heat and mass transfer, engineering materials and fluid dynamic were employed to ensure product, reliability, bearing in mind the need to reduce cost. The crucible inside the hearth was loaded with scraps from aluminum roofing sheets off cuts and canned drinks. Then it was heated and after heating for about 10 to 20 minutes, the aluminum scraps melted indicating that the forge is able to attain temperatures ranging from 620 to 680°c which is the melting temperature range of aluminum. Successful melting of the aluminum scrap by the forge shows that the research objectives were successful.

The more efficient the heat transfer processes, the higher the overall furnace efficiency, and thus heat generated was able to melt the non-ferrous metal used. Furthermore, the thermocouple responded to the heats produced which displayed on the thermo controller.

CONCLUSION

The developed furnace did not only have good heat retention capacity, but has a fast heating rate. It was able to melt used cans and aluminum scraps in less than 20 minutes. The refractory material prevented heat losses and made available more heat energy needed to melt the material in the furnace. The material used for development of the crucible furnace where all procured locally to encourage indigenous industries and subsequently for further research.

It was observed that the developed crucible furnace has a fast heating rate (61.240C/min to attain a pre-set temperature of 1915°C) and very good fuel economy- consuming less than 1.41 litres/hr. it was also observed that the furnace has good heat retaining capacity, can be easily maintained and is safe for use.

In other to achieve the basic engineering design parameters and value engineering analysis through the principles of thermodynamic, heat and mass transfer, engineering materials and fluid dynamic were employed to ensure product, reliability, bearing in mind the need to reduce cost. The crucible inside the hearth was loaded with scraps from aluminum roofing sheets off cuts and canned drinks. Then it was heated and after heating for about 10 to 20 minutes, the aluminum scraps melted indicating that the forge is able to attain temperatures ranging from 620 to 680°c which is the melting temperature range of aluminum. Successful melting of the aluminum scrap by the forge shows that the research objectives were successful.

The material used for development of the crucible furnace where all procured locally to encourage indigenous industries and subsequently for further research.

RECOMMENDATIONS

Based on the research work and conclusion, these recommendations are made for a better and more efficient functioning of the blacksmith's hearth (forge).

a. Due to the brittle nature of the refractory material, the forge should be positioned permanently in a particular place and should not be moved about frequently unless when it is necessary to do so.
b. The forge is recommended only for laboratory tests, melting of non-ferrous metals with low melting points hence the forge should not be at any time heated fully to very high temperatures above 1400°C
c. Inspection and maintenance should be conducted periodically on the forge mostly on the air.
d. In other not to experience much difficulty in igniting the fuel, the diesel oil shouldn't mix with water.

To get a uniform heat distribution, the amount of air moving into the forge through the diesel burner should be regulated little by little.

REFERENCES

[1] Gupta J. (2008) Elements of Fuels, Furnaces and Refractory's , 5th Edition, Romesh Chanda Khanna, New Delhi, pp. 1089-1456

[2] Osarenmwinda J.O. (2015) Fabrication and Performance Evaluation of Oil-fired Crucible Furnace using locally sourced materials. International Journal of Engineering Research and Application 5(3), pp. 29-33

[3] Asibeluo I.S. Ogwor O.E, (2015) Design of a 50-Kilogram capacity cart iron crucible furnace using locally available materials, International Journal of Research in Engineering and Technology ISSN: 2319-1163 PISSN:2321-7308.

[4] Totten E. George (200) Steel Heat Treatment Handbook, 2nd Edition; pp. 91-105.

[5] Eman J. Abed (3013) Manufacturing and Performance of Gas Furnace. International Journal Metallurgical & Materials, 3(1), pp.109-118

[6] Adeodu Adefemi, Daniyan Ilesanmi, Babalola Simeon, Okojie Favour and Aderobe Adeyemi (2017) Development of a 30kg Aluminum Oil-fired Crucible Furnace Using Locally Sourced Materials. American Journal of Mechanical and Applications, 5(3), pp. 15-21.

[7] Govarthan J, Rao G.V.S and Narasaiah J. (2011) Experimental investigations and CFD study of Temperature Distribution during Oscillating Combustion in a crucible furnace, International Journal of Energy and Environment. Vol.2 no 5 pp 783-796

[8] Olenyi Joseph, Oghenekaro Peter, Joseph Michael Irabodemeh and Sheidu Sumaila Onimisi (2016) Design and Thermal Analysis of Crucible Furnace for Non-ferrous Metal. Journal of Information Engineering and Applications, 6(3), pp. 5-9.

[9] Dossee, T. and Boyer, H. Practical Heat Treating. Journal of Materials Processing Technology, 1997, 14(7): 235-257.

[10] Fairbanks, L.H. and Palthorpe, L.G.W.: Controlled Atmospheres for Heat Treatment of Metals. Revised Edition; Iron and Steel Institutes, Spain, 1998, pp. 45-60.

[11] Oyawale F.A. Odior A.O. and Aganwaonyi (2011) Design and Construction of Oil Fired Compacty Crucible Furnace. Journal of the Nigerian Association of mathematical Physics, vol. 18

[12]Rahul Bhamare, Shubbam Wagh, Parag More, Akshay Zole, S.Y. Sonaye (2017) Design and Manufacturing of Portable Metal Melting Furnace ; International Conference on Ideas, Impact and Innovation in Mechanical Engineering, 5(6), pp.748-752’