Symbolic dynamics generated by a hybrid chaotic systems

Carlos Correia Ramos[1], **Ana Isabel Santos**[*1] **and Sandra Vinagre**[1]

[1] *Department of Mathematics, CIMA, University of Évora ,*
Rua Romão Ramalho 59, 7000-671 Évora, Portugal

Original Research Article

Received: XX December 20XX
Accepted: XX December 20XX
Online Ready: XX December 20XX

Abstract

We consider piecewise defined differential dynamical systems which can be analysed through symbolic dynamics and transition matrices.
We have a continuous regime, where the time flow is characterized by an ordinary differential equation (ODE) which has explicit solutions, and the singular regime, where the time flow is characterized by an appropriate transformation.
The symbolic codification is given through the association of a symbol for each distinct regular system and singular system. The transition matrices are then determined as linear approximations to the symbolic dynamics. We analyse the dependence on initial conditions, parameter variation and the occurrence of global strange attractors.

Keywords: Dynamical systems; Symbolic dynamics; Iteration theory; Transition matrices; Attractors.
2010 Mathematics Subject Classification: 26A18; 37B10; 37B40; 37C25; 37D45

1 Introduction

Piecewise linear dynamics may be used to study several mechanical systems such as gear box and rotor-bearing systems. For many years, the dynamics of gears has been of great interest to improve transmission and to reduce machinery noise. Although, in the initial phase, the linear vibration model developed provides a good prediction of gear vibration at low speeds, owing to high speed requirement in this type of systems, the linear vibration model is no longer adequate. So, in recent decades, with the aim of finding the origin of the vibration and noise, the piecewise linear model and

*Corresponding author: E-mail: aims@uevora.pt

the impact model were developed. In the literature, we find several models considering the piecewise linear system to describe engineering vibrations, such as vibration in gear box, rotor-bearing and elasto-plastic structures (see [(7)]). For example, in 1983, Shaw and Holmes [(10)] investigated a piecewise linear system with a single discontinuity using the mapping technique. More recently, Luo and Chen [(7)] presented an idealized piecewise linear system with impacts to model the vibration of gear transmission systems, which was investigated analytically through the corresponding mapping structures. Moreover, piecewise linear systems, on one hand have explicit solutions, since involves linear differential equations, on the other hand can be used to study chaotic nonlinear systems, through the methods we explain below.

In this paper, we consider a forced damped piecewise oscillator whose motion is modeled by the second-order non-autonomous differential equation

$$x'' + \alpha\, x' + g(x) = F\cos(\omega t), \tag{1.1}$$

where α is the damping coefficient, F is the forcing amplitude, ω is the forcing frequency and g is a linear piecewise function. Therefore, we have a continuous regime, where the time flow is characterized by the explicit solutions of the ordinary differential equations, and a singular regime, where the time flow is characterized by an appropriate transformation. In the continuous regime, we have in fact a linear regime. The phase space is partitioned in these continuous regimes, and in each set of the partition the system has a unique explicit solution, since the ODE is linear in each part. When the system is in a singular regime it changes to another region of the partition, entering again in a continuous regime. This method allow us to study a nonlinear system with very complex behaviour such as (1.1). Our differential dynamical system will be studied by making use of symbolic dynamics and transition matrices, with similar techniques as the ones applied in [(9)]. The behaviour of the system, depending on the parameters, is simple, periodic or chaotic. Moreover in certain regions of the parameters there are sensitivity to the initial conditions and sensitivity to parameter perturbation. Numerical simulations of periodic and chaotic motion, that illustrate the dependence on initial conditions and the parameter variation, will be presented and the occurrence of global strange attractors will be analysed. We show how to associate the system to symbolic dynamical systems - topological Markov chains - characterized by transition matrices. These transition matrices gives important characterization of the system in the chaotic behaviour, namely the computation of the topological entropy.

2 The forced damped piecewise oscillator model

If we consider that x represents the displacement, x' is the velocity and x'' is the acceleration, the motion of a forced damped oscillator can be described by the second-order non-autonomous differential equation (1.1), where g is a linear piecewise function defined by

$$g(x) = \begin{cases} \dfrac{2}{\pi}\, x - 2j & \text{if} \quad x \in I_j = \left[-\dfrac{\pi}{2} + j\pi, \dfrac{\pi}{2} + j\pi\right] \text{ and } j \text{ even,} \\[2ex] -\dfrac{2}{\pi}\, x + 2j & \text{if} \quad x \in I_j = \left[-\dfrac{\pi}{2} + j\pi, \dfrac{\pi}{2} + j\pi\right] \text{ and } j \text{ odd.} \end{cases}$$

The local solutions of equation (1.1) are known explicitly on each interval $I_j,\ j \in \mathbb{Z}$, since the two families of differential equations involved are linear:

$$x'' + \alpha x' + \frac{2}{\pi}\, x - 2j = F\cos(\omega t), \tag{2.1}$$

for $x \in I_j = \left[-\dfrac{\pi}{2} + j\pi, \dfrac{\pi}{2} + j\pi\right]$ and j even, and

$$x'' + \alpha x' - \frac{2}{\pi}\, x + 2j = F\cos(\omega t), \tag{2.2}$$

for $x \in I_j = \left[-\frac{\pi}{2} + j\pi, \frac{\pi}{2} + j\pi\right]$ and j odd.

First, we deduce the expression of the solution of the family of differential equations (2.1). In order to obtain the general solution of the homogeneous equation

$$x'' + \alpha x' + \frac{2}{\pi}\, x = 0,$$

we consider the characteristic equation of the differential equation, $P(\lambda) = 0$, given by

$$P(\lambda) = \lambda^2 + \alpha\lambda + \frac{2}{\pi} = 0.$$

Since,

$$\lambda^2 + \alpha\lambda + \frac{2}{\pi} = 0 \Longleftrightarrow \lambda = -\frac{\alpha}{2} \pm \sqrt{\left(\frac{\alpha}{2}\right)^2 - \frac{2}{\pi}},$$

if $\left(\frac{\alpha}{2}\right)^2 - \frac{2}{\pi} < 0$, that is, $|\alpha| < \sqrt{\frac{8}{\pi}}$, we obtain a pair of complex conjugate roots. Thus, the general solution of the homogeneous equation, $x_h(t)$, is of the form

$$x_h(t) = e^{-\frac{\alpha}{2}t}\left[c_1 \cos\left(\sqrt{\beta_1}t\right) + c_2 \sin\left(\sqrt{\beta_1}t\right)\right], \tag{2.3}$$

where $\beta_1 = \frac{2}{\pi} - \left(\frac{\alpha}{2}\right)^2$ and the coefficients c_1 and c_2 depend on the initial conditions.

Now, we must determine the particular solution, $x_p(t)$, of the family of differential equations (2.1). In this case, note that the family of differential equations (2.1) can be written in the form

$$P(D)x = q_1(t) + q_2(t) = F\cos(\omega t) + 2j,$$

where D is the differential operator, $P(D)x_1 = q_1(t)$ and $P(D)x_2 = q_2(t)$. So

$$q_1(t) = a_1\cos(bt) + a_2\sin(bt) = F\cos(\omega t)$$

and, therefore, we have $a_1 = F, \quad a_2 = 0$ and $b = \omega$. As $z = \pm i\omega$ is not a root of the characteristic equation $P(\lambda) = 0$, then $k = 0$ is the multiplicity of $\pm i\omega$ in $P(\lambda)$. Thus, the particular solution $x_1(t)$ is of the form

$$x_1(t) = A\cos(\omega t) + B\sin(\omega t),$$

where A and B are constants.

On the other hand, since $q_2(t) = 2j$ and $k = 0$, because $z = 0$ is not a root of $P(\lambda)$, we have that the particular solution $x_2(t)$ is A_0. Therefore, the particular solution of this family of differential equations can be defined as

$$x_p(t) = x_1(t) + x_2(t) = A\cos(\omega t) + B\sin(\omega t) + A_0.$$

Now, deriving $x_p(t)$ and replacing the expressions in equation (2.1), we obtain

$$\begin{aligned} &-A\omega^2\cos(\omega t) - B\omega^2\sin(\omega t) + \alpha[-A\omega\sin(\omega t) + B\omega\cos(\omega t)] + \frac{2}{\pi}\left[A\cos(\omega t) + B\sin(\omega t) + A_0\right] \\ &= F\cos(\omega t) + 2j \Longleftrightarrow A = \frac{F\left(\frac{2}{\pi} - \omega^2\right)}{\alpha^2\omega^2 + \left(\frac{2}{\pi} - \omega^2\right)^2}, \quad B = \frac{F\,\alpha\,\omega}{\alpha^2\omega^2 + \left(\frac{2}{\pi} - \omega^2\right)^2} \quad \text{and} \quad A_0 = j\pi. \end{aligned}$$

So, the particular solution is

$$x_p(t) = \frac{F\left(\frac{2}{\pi} - \omega^2\right)}{\alpha^2\omega^2 + \left(\frac{2}{\pi} - \omega^2\right)^2}\cos(\omega t) + \frac{F\,\alpha\,\omega}{\alpha^2\omega^2 + \left(\frac{2}{\pi} - \omega^2\right)^2}\sin(\omega t) + j\pi. \tag{2.4}$$

Consequently, by (2.3) and (2.4), we have that the general solution of the family of equations (2.1) is

$$x(t) = e^{-\frac{\alpha}{2}t}\left[c_1\cos\left(\sqrt{\beta_1}t\right) + c_2\sin\left(\sqrt{\beta_1}t\right)\right]$$
$$+\frac{F\left(\frac{2}{\pi}-\omega^2\right)}{\alpha^2\omega^2+\left(\frac{2}{\pi}-\omega^2\right)^2}\cos(\omega t) + \frac{F\,\alpha\,\omega}{\alpha^2\omega^2+\left(\frac{2}{\pi}-\omega^2\right)^2}\sin(\omega t) + j\pi.$$

Considering the initial conditions $x(t_0) = x_0 \in I_j = \left[-\frac{\pi}{2}+j\pi, \frac{\pi}{2}+j\pi\right]$, with j even, and $x'(t_0) = v_0$, the local solution of the family of differential equations (2.1) in each interval I_j, with j even, is

$$x(t) = e^{-\frac{\alpha}{2}(t-t_0)}\left[A_1\cos\left(\sqrt{\beta_1}\,(t-t_0)\right) + A_2\sin\left(\sqrt{\beta_1}\,(t-t_0)\right)\right]$$
$$+\frac{F\left(\frac{2}{\pi}-\omega^2\right)}{\alpha^2\omega^2+\left(\frac{2}{\pi}-\omega^2\right)^2}\cos\left(\omega\,(t-t_0)\right) + \frac{F\,\alpha\,\omega}{\alpha^2\omega^2+\left(\frac{2}{\pi}-\omega^2\right)^2}\sin\left(\omega\,(t-t_0)\right) + j\pi, \tag{2.5}$$

where the coefficients A_1 and A_2, that depend on the initial conditions, are

$$A_1 = x_0 - j\pi - \frac{F\left(\frac{2}{\pi}-\omega^2\right)}{\left(\frac{2}{\pi}-\omega^2\right)^2+\alpha^2\omega^2},$$

$$A_2 = -\frac{1}{\sqrt{\beta_1}}\left[\frac{F\,\alpha\,\omega^2}{\alpha^2\omega^2+\left(\frac{2}{\pi}-\omega^2\right)^2} - v_0 + \frac{\alpha}{2}\left(j\pi - x_0 + \frac{F\left(\frac{2}{\pi}-\omega^2\right)}{\alpha^2\omega^2+\left(\frac{2}{\pi}-\omega^2\right)^2}\right)\right].$$

The expression of the solution of the family of differential equations (2.2) can be obtained in an analogous way. Since, the homogeneous equation is

$$x'' + \alpha x' - \frac{2}{\pi}x = 0,$$

then the characteristic equation of the differential equation is

$$P(\lambda) = \lambda^2 + \alpha\lambda - \frac{2}{\pi} = 0$$

and, in this case, we have two distinct real roots

$$\lambda = -\frac{\alpha}{2} - \sqrt{\left(\frac{\alpha}{2}\right)^2 + \frac{2}{\pi}} \quad \textit{and} \quad \lambda = -\frac{\alpha}{2} + \sqrt{\left(\frac{\alpha}{2}\right)^2 + \frac{2}{\pi}},$$

so the general solution of the homogeneous equation, $x_h(t)$, is of the form

$$x_h(t) = e^{-\frac{\alpha}{2}t}\left[d_1 e^{-\sqrt{\beta_2}t} + d_2 e^{\sqrt{\beta_2}t}\right], \tag{2.6}$$

where $\beta_2 = \frac{2}{\pi} + \left(\frac{\alpha}{2}\right)^2$ and the coefficients d_1 and d_2 depend on the initial conditions.

As in the previous case, the particular solution of the family of differential equation (2.2) is defined by

$$x_p(t) = x_1(t) + x_2(t) = \overline{A}\cos(\omega t) + \overline{B}\sin(\omega t) + \overline{A_0}.$$

Then, deriving $x_p(t)$ and replacing the expressions in the equation (2.2), we have that

$$\overline{A} = -\frac{F\left(\frac{2}{\pi}+\omega^2\right)}{\alpha^2\omega^2+\left(\frac{2}{\pi}-\omega^2\right)^2}, \quad \overline{B} = \frac{F\,\alpha\,\omega}{\alpha^2\omega^2+\left(\frac{2}{\pi}+\omega^2\right)^2} \quad \text{and} \quad \overline{A_0} = j\pi.$$

So, the particular solution is

$$x_p(t) = -\frac{F\left(\frac{2}{\pi}+\omega^2\right)}{\alpha^2\omega^2+\left(\frac{2}{\pi}-\omega^2\right)^2}\cos(\omega t) + \frac{F\,\alpha\,\omega}{\alpha^2\omega^2+\left(\frac{2}{\pi}+\omega^2\right)^2}\sin(\omega t) + j\pi. \tag{2.7}$$

Thus, by (2.6) and (2.7), the general solution of the family of equations (2.1) is

$$x(t) = e^{-\frac{\alpha}{2}t}\left[d_1 e^{-\sqrt{\beta_2}t} + d_2 e^{\sqrt{\beta_2}t}\right] - \frac{F\left(\frac{2}{\pi}+\omega^2\right)}{\alpha^2\omega^2 + \left(\frac{2}{\pi}-\omega^2\right)^2}\cos(\omega t) + \frac{F\,\alpha\,\omega}{\alpha^2\omega^2 + \left(\frac{2}{\pi}+\omega^2\right)^2}\sin(\omega t) + j\pi.$$

Consequently, the local solution of the family of differential equations (2.2) in each interval $I_j = \left[-\frac{\pi}{2}+j\pi, \frac{\pi}{2}+j\pi\right]$, with j odd, based on the initial conditions $x(t_0) = x_0 \in I_j$, with j odd, and $x'(t_0) = v_0$, is given by

$$\begin{aligned} x(t) &= e^{-\frac{\alpha}{2}(t-t_0)}\left[B_1\, e^{-\sqrt{\beta_2}(t-t_0)} + B_2\, e^{\sqrt{\beta_2}(t-t_0)}\right] \\ &-\frac{F\left(\frac{2}{\pi}+\omega^2\right)}{\alpha^2\omega^2 + \left(\frac{2}{\pi}+\omega^2\right)^2}\cos\left(\omega\left(t-t_0\right)\right) + \frac{F\,\alpha\,\omega}{\alpha^2\omega^2 + \left(\frac{2}{\pi}+\omega^2\right)^2}\sin\left(\omega\left(t-t_0\right)\right) + j\pi, \end{aligned} \tag{2.8}$$

where the coefficients B_1 and B_2 are

$$\begin{aligned} B_1 &= \frac{1}{2\sqrt{\beta_2}}\left[\frac{F\,\alpha\,\omega^2}{\alpha^2\omega^2 + \left(\frac{2}{\pi}+\omega^2\right)^2} - v_0 - \left(\sqrt{\beta_2} - \frac{\alpha}{2}\right)\left(j\pi - x_0 - \frac{F\left(\frac{2}{\pi}+\omega^2\right)}{\alpha^2\omega^2 + \left(\frac{2}{\pi}+\omega^2\right)^2}\right)\right], \\ B_2 &= \left(j\pi - x_0 + \frac{F\left(\frac{2}{\pi}+\omega^2\right)}{\alpha^2\omega^2 + \left(\frac{2}{\pi}+\omega^2\right)^2}\right)\left(\frac{1}{2} + \frac{\alpha}{4\sqrt{\beta_2}}\right) + \frac{1}{2\sqrt{\beta_2}}\left(\frac{F\,\alpha\,\omega^2}{\alpha^2\omega^2 + \left(\frac{2}{\pi}+\omega^2\right)^2} - v_0\right). \end{aligned}$$

Therefore, the families of solutions (2.5) and (2.8) can be repeatedly matched at

$$x = -\frac{\pi}{2} + j\pi \text{ and } x = \frac{\pi}{2} + j\pi, \quad j \in \mathbb{Z},$$

the boundary points of the intervals I_j, to obtain the global solution of the equation (1.1) as a continuous function. In fact, it is differentiable since we match the first derivatives.

3 Symbolic dynamics and transition matrix

The main idea behind Milnor and Thurston's kneading theory [(8)] is to provide a classification of modal maps in the interval using the symbolic itineraries of its critical points. Next, we present a brief description of the symbolic dynamics for the particular case of bimodal maps (see, for example, [(1)] and [(3)]).

We say that a continuous and piecewise monotonic map in the interval is bimodal if it has two critical points in the interior of I and $f(\partial I) \subset \partial I$.

Given a bimodal map f in a interval $I = [a, b]$, with c_1 and c_2 as critical points, assign the symbols L (left), M (middle) and R (right) to each sub-interval of monotonicity and the symbols A and B for each critical point (see [(5)]). By doing this, we get a correspondence between orbits of points $x \in I$ and symbolic sequences of $\Sigma = \{L, A, M, B, R\}^{\mathbb{N}}$, the itinerary of x by the map f,

$$it_f(x) = \text{ad}(x)\,\text{ad}(f(x))\,\text{ad}\left(f^2(x)\right)\ldots,$$

with $\text{ad}\left(f^k(x)\right)$, the so-called address of the point $f^k(x)$, given by

$$\text{ad}\left(f^k(x)\right) = \begin{cases} L & \text{if} \quad f^k(x) < c_1, \\ A & \text{if} \quad f^k(x) = c_1, \\ M & \text{if} \quad c_1 < f^k(x) < c_2, \\ B & \text{if} \quad f^k(x) = c_2, \\ R & \text{if} \quad f^k(x) > c_2. \end{cases}$$

The kneading data of the map f is the pair of itineraries of the image of each critical point,

$$\mathcal{K}(f) = (\mathcal{K}_1(c_1), \mathcal{K}_2(c_2)) = (it_f(f(c_1)), it_f(f(c_2))),$$

or only one when both critical points exist in the same orbit. The significance of this symbolic topological invariant was made clear when Guckenheimer [(4)] presented a classification theorem of modal maps in the interval based on its kneading data, showing how close it is from its topological classification.

On the set Σ we define an order relation through the $M-$parity of a sequence S, that is, the parity of the frequency in S of the symbol M. So, for two such sequences, P and Q in Σ, let i such that $P_i \neq Q_i$ and $P_j = Q_j$ for $j < i$. If the $M-$parity of the block $P_1 \ldots P_{i-1} = Q_1 \ldots Q_{i-1}$ is even we say that $P < Q$ if $P_i = L$ and $Q_i \in \{A, M, B, R\}$ or $P_i = A$ and $Q_i \in \{M, B, R\}$ or $P_i = M$ and $Q_i \in \{B, R\}$ or $P_i = B$ and $Q_i = R$. If the $M-$parity of the same block is odd, we say that $P < Q$ if $P_i = A$ and $Q_i = L$ or $P_i = M$ and $Q_i \in \{L, A\}$ or $P_i = B$ and $Q_i \in \{L, A, M\}$ or $P_i = R$ and $Q_i \in \{L, A, M, B\}$. If no such index i exists, then $P = Q$. When the orbit of a critical point, $\mathcal{O}_f(c_1)$ or $\mathcal{O}_f(c_2)$, is a $k-$periodic orbit we get a sequence of symbols that can be characterized by a block of length k, $S^{(k-1)}A = S_1 \ldots S_{k-1}A$ or $S^{(k-1)}B = S_1 \ldots S_{k-1}B$.

In what follows, we restrict our study to the case where the two critical points are periodic, c_1 has a $p-$periodic orbit and c_2 has a $q-$periodic orbit. Note that $\mathcal{O}_f(c_1)$ is realizable if the block $P = P^{(p-1)}A = P_1 \ldots P_{p-1}A$ is maximal, that is, $\sigma^i(P) \prec \sigma(P)$, where $i = 1, \ldots, p$ and σ is the usual shift operator defined by $\sigma(P_1P_2P_3 \ldots) = P_2P_3 \ldots$. On the other hand, $\mathcal{O}_f(c_2)$ is realizable if the block $Q = Q^{(q-1)}B = Q_1 \ldots Q_{q-1}B$ is minimal, that is, $\sigma^j(Q) \succ \sigma(Q)$, where $j = 1, \ldots, q$. Finally, note that the pair of sequences is realizable if it satisfies the following conditions $\sigma^i(P) \succ \sigma(Q)$, $i = 1, \ldots, p$ and $\sigma^j(Q) \prec \sigma(P)$, $j = 1, \ldots, q$.

Now, we present the transition matrix for $m-$modal maps, that allows us to determine the topological entropy of the map f. Let f be $m-$modal map in the interval $I = [a, b]$ with kneading invariant $\mathcal{K} = (\mathcal{K}_1, \ldots, \mathcal{K}_m)$, such that the orbits of the critical points are all periodic with periods $p_1, \ldots, p_m$, respectively, that is,

$$(\mathcal{K}_i)_{p_i} = C_i \text{ for } i = 1, \ldots, m \text{ and } p_i > 0,$$

where C_i is the symbol that corresponds to the critical point c_i, for $i = 1, \ldots, m$.

Let $\{X_i\}_{i=1}^{p_1+\ldots+p_m}$ be the set of itineraries given by the union of the sets

$$\left\{\sigma^i(\mathcal{K}_1)\right\}_{i=1}^{p_1}, \ldots, \left\{\sigma^i(\mathcal{K}_m)\right\}_{i=1}^{p_m},$$

where σ is shift-operator, and let $\{x_i\}_{i=1}^{p_1+\ldots+p_m}$ be the set of the points of the interval such that

$$it_f(x_i) = X_i.$$

Denoting by ρ a permutation in the set $\{1, 2, \ldots, p_1 + \ldots + p_m\}$ such that

$$x_{\rho(1)} < x_{\rho(2)} < \cdots < x_{\rho(p_1+\ldots+p_m)}$$

and doing $z_i = x_{\rho(i)}$ and $J_i = [z_i, z_{i+1}]$, for $i = 1, 2, \ldots, p_1 + \ldots + p_m$, we obtain a partition of the interval I determined by the orbits of the *m* critical points of the map. In this conditions, we can define the following matrix.

The transition matrix associated to the kneading invariant $\mathcal{K} = (\mathcal{K}_1, \ldots, \mathcal{K}_m)$, denoted by $A_{\mathcal{K}}$, is the square matrix, with dimension $p_1 + \cdots + p_m - 1$, whose elements a_{ij} are given by

$$a_{ij} = \begin{cases} 1 & \text{if } J_j \subset f(J_i), \\ 0 & \text{otherwise.} \end{cases}$$

We can calculate the topological entropy of a piecewise monotonic map in the interval through the corresponding transition matrix. This result, which the proof is in [(2)], [(5)] and [(6)], can be stated as follows.

Proposition 3.1. *Let f be a $m-$modal map with kneading invariant $\mathcal{K} = \mathcal{K}(f)$. Let $A_{\mathcal{K}}$ be the transition matrix associated to $\mathcal{K}$. Then, the topological entropy of f is given by*

$$h_t(f) = \log(\lambda_{\max}(A_{\mathcal{K}})),$$

where $\lambda_{\max}(A_{\mathcal{K}})$ is the spectral radius of $A_{\mathcal{K}}$.

4 Numerical results

In this section, we will use the symbolic dynamics and transition matrices to analyse the nonlinear dynamics of the forced damped piecewise oscillator. As mentioned previously, the great advantage in getting matrices is that it allows us to calculate quantities like the topological entropy.

Let us begin by examining the behaviour of x as a function of time for several sets of parameters. If we consider that the initial conditions are $x(0) = 0$ and $x'(0) = 0$ and the same values for the damping coefficient α and the forcing frequency ω, the behaviour of the motion of the forced damped piecewise oscillator changes radically when the forcing amplitude F increases. For example, for a small damping coefficient $\alpha = 0.75$ and a forcing frequency $\omega = 0.6$, and considering that the value of the forcing amplitude varies between $F = 1.31$ and $F \approx 1.38596$, we obtain different types of orbits, as it can be seen in Figure 1, that exhibits different attractors, namely periodic and aperiodic ones.

Although, the pattern presented in Figure 1 (e) is not a simple one as it is not completely random. The behaviour in the chaotic regime is characterized by the phase-space trajectories exhibiting many orbits that are nearly closed. This is a common property of chaotic systems – they generally exhibit phase-space trajectories with significant structure.

If we consider now a given set of parameters α, ω and F, the numerical results show that, for most of the parameters values, the first return map is a bimodal map, therefore with two critical points, c_1 and c_2. This lead us to two distinct situations: the orbit of c_1 coincides with the orbit of c_2, or the orbit of c_1 is different from the orbit of c_2.

On the other hand, we search for values of the parameters for which the orbits of c_1 and c_2 are finite. In fact, these are the ones relevant physically and computationally. In this case, we show how to build the transition matrices.

In the first example, we show the evolution of the system described by our model, for different initial conditions, only through the first return map. The return map indicates that, for this set of parameter values, the behaviour of the coordinate x can be modeled by a one-dimensional iterated map.

Example 4.1. *Consider that the values of the damping and forcing frequency parameters are $\alpha = 0.75$, $\omega = 0.6$ and the forcing amplitude is $F \approx 1.38598$. Figure 2 shows the first return maps plotted for the velocity of the forced damped piecewise oscillator, which yields chaotic behaviour.*

In the next example, we use symbolic dynamics to obtain the transition matrices.

Example 4.2. *Consider the set of parameters $\alpha = \omega = 0.5$ and $F \approx 0.783879$. Then, the orbits and the first return maps presented in Figure 3 describe the evolution of the system. It exhibits the existence of two different attractors.*

Each of the critical points with period five obtained has, respectively, the kneading sequences $\mathcal{K} = LMMLA$, in the first case where the initial conditions are $x(0) = 0.22$ and $x'(0) = 0$, and $\mathcal{K} = RMMRB$, in the second where corresponding initial conditions are $x(0) = 0$ and $x'(0) = 0$, to which we can associate, respectively, the following transition matrices:

$$A_{LMMLA} = \begin{bmatrix} 0 & 0 & 1 & 0 \\ 0 & 1 & 1 & 0 \\ 0 & 1 & 1 & 1 \\ 1 & 1 & 1 & 1 \end{bmatrix} \text{ and } A_{RMMRB} = \begin{bmatrix} 1 & 1 & 1 & 1 \\ 0 & 1 & 1 & 1 \\ 0 & 1 & 1 & 0 \\ 0 & 0 & 1 & 0 \end{bmatrix}.$$

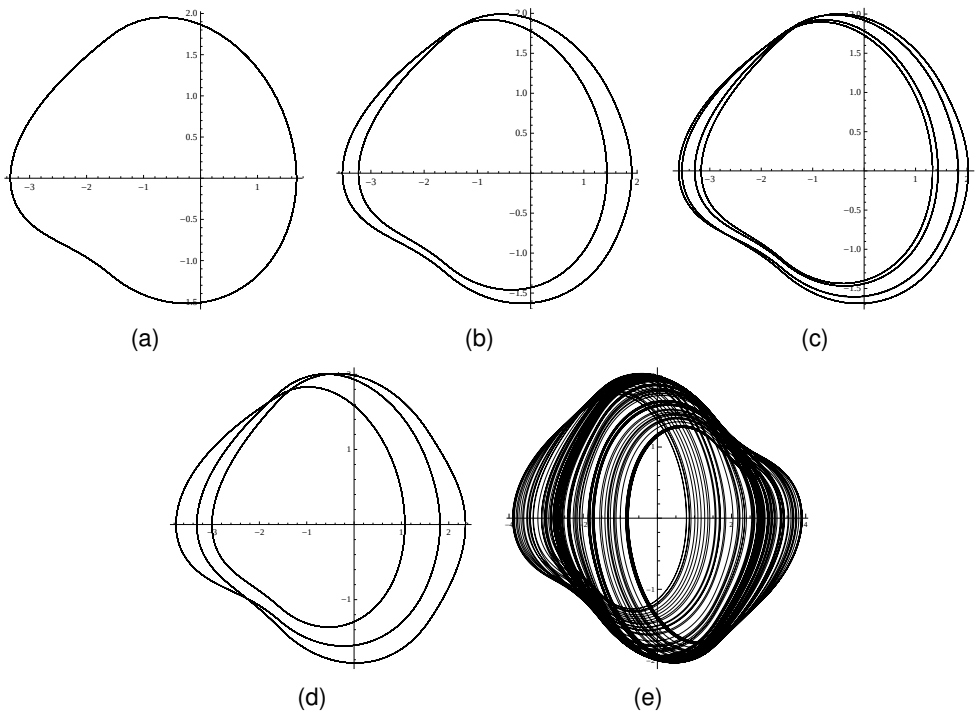

Figure 1: Graphs of the orbits for (a) $F = 1.31$, (b) $F = 1.3355$, (c) $F = 1.345$, (d) $F = 1.367$ and (e) $F \approx 1.38598$, with $\alpha = 0.75$, $\omega = 0.6$ and the initial conditions $x(0) = 0$ and $x'(0) = 0$.

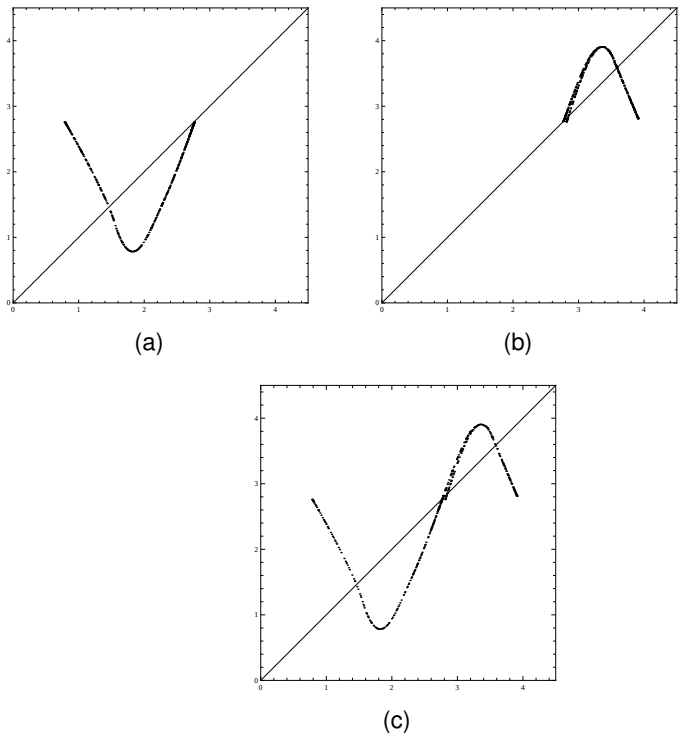

Figure 2: Graphs of the first return map, for $\alpha = 0.75$, $\omega = 0.6$ and $F \approx 1.38598$, considering the initial conditions (a) $x(0) = 0.25,\ x'(0) = 0$, (b) $x(0) = 0.3$, $x'(0) = 0$ and (c) $x(0) = 0$, $x'(0) = 0$.

Given that the spectral radius of both matrices is $\lambda_{\max}(A_{LMMLA}) = \lambda_{\max}(A_{RMMRB}) \approx 2.71761$*, then the topological entropy is approximately* 0.99975*, in both cases.*

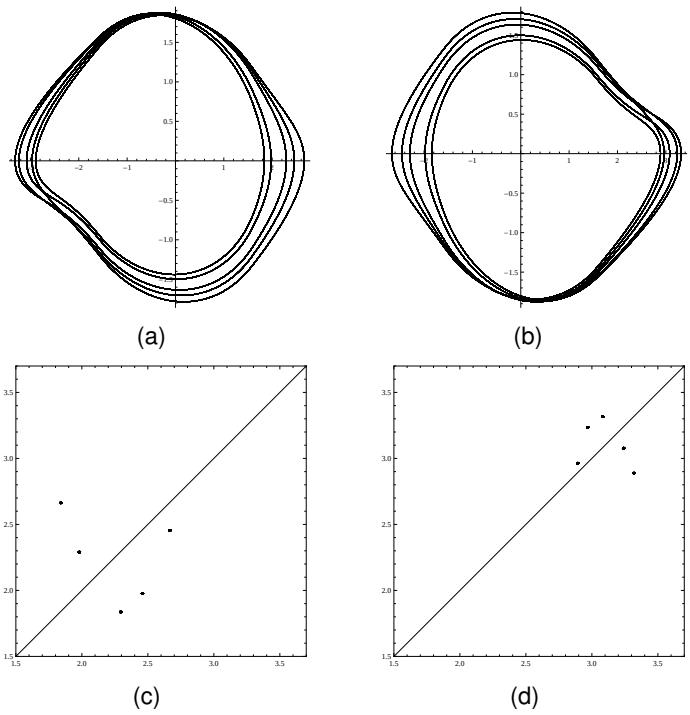

Figure 3: Graphs of the orbits, (a) and (b), and the first return maps, (c) and (d), for the corresponding initial conditions and parameters values presented in Example 4.2.

In the last example, we present a case where we obtain an orbit with period eleven. In this case, we have one attractor since the orbit of c_1 coincides with the orbit of c_2.

Example 4.3. *Considering the set of parameters* $\alpha = 0.75$, $\omega = 0.6$ *and* $F = 1.391$*, we obtain both critical points with period eleven, whose orbit and the first return map are presented in Figure 4. In this case, since the two attractors coincide, we have the kneading sequence*

$$\mathcal{K} = RMMMLALMMRB.$$

So, the transition matrix $A_{\mathcal{K}}$ *associated to the kneading sequence* $\mathcal{K}$ *is given by*

$$A_{RMMMLALMMRB} = \begin{bmatrix} 0 & 0 & 1 & 1 & 1 & 1 & 0 & 0 & 0 & 0 \\ 1 & 1 & 0 & 0 & 0 & 0 & 0 & 0 & 0 & 0 \\ 1 & 0 & 0 & 0 & 0 & 0 & 0 & 0 & 0 & 0 \\ 0 & 1 & 1 & 0 & 0 & 0 & 0 & 0 & 0 & 0 \\ 0 & 0 & 0 & 1 & 0 & 0 & 0 & 0 & 0 & 0 \\ 0 & 0 & 0 & 0 & 1 & 1 & 1 & 0 & 0 & 0 \\ 0 & 0 & 0 & 0 & 0 & 0 & 0 & 1 & 1 & 0 \\ 0 & 0 & 0 & 0 & 0 & 0 & 0 & 0 & 0 & 1 \\ 0 & 0 & 0 & 0 & 0 & 0 & 0 & 0 & 1 & 1 \\ 0 & 0 & 0 & 0 & 0 & 1 & 1 & 1 & 0 & 0 \end{bmatrix}$$

and since the spectral radius of the matrix is $\lambda_{\max}(A_{\mathcal{K}}) \approx 2.11157$*, we have that the topological entropy is about* 0.74743*.*

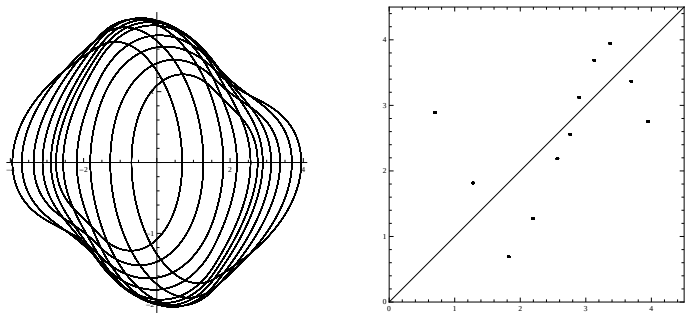

(a) (b)

Figure 4: Graphs of (a) the orbit and (b) the first return map of the periodic points, with $\alpha = 0.75$, $\omega = 0.6$ and $F = 1.391$.

5 CONCLUSIONS

In the present work, we studied the motion of a forced damped piecewise oscillator which is modeled by a second-order non-autonomous differential equation. Our piecewise linear dynamical systems have a continuous regime, where the time flow is characterized by the explicit solutions of the ordinary differential equations, and a singular regime, where the time flow is characterized by an appropriate transformation. Using symbolic dynamics and transition matrices, we analysed the behaviour of the motion of the forced damped piecewise oscillator. As it was shown in Figures 1−4, the variation of the parameters α, ω and F and also of the initial conditions produces a significant effect in the behaviour of the motion.

Acknowledgment

This work was partially supported by national funds from the FCT – Fundação para a Ciência e a Tecnologia, within the project UID/MAT/04674/2013.

References

[1] Almeida, P. et al. (1996). Topological invariants for bimodal maps. In: Proceedings of ECIT92, Forg-Rob, W., Gronau, D., Mira, C., Netzer, N., Targonski, G., (Eds.), World Scientific, 18.

[2] Balmforth, N. et al. (1994). The topological entropy of one-dimensional maps: approximation and bounds. Phys. Rev. Lett., 80, 80–83.

[3] Correia, M.F. et al. (2013). Invariants for the topological characterization of the iteration of differentiable functions - the bimodal case. European Physical Journal: Special Topics, 222(2), 285–301.

[4] Guckenheimer, J. (1979). Sensitive dependence on initial conditions for one-dimensional maps. Comm. Math. Phys., 70, 133–160.

[5] Lampreia, J.P., Sousa Ramos, J. (1997). Symbolic dynamics of bimodal maps. Port. Math. (N.S.), 54(Fasc.1), 1–18.

[6] Lampreia, J.P., Sousa Ramos, J. (1993). Trimodal Maps. Int. J. Bifurcation and Chaos, 3(6), 1607–1617.

[7] Luo, A.C.J., Chen L. (2005). Periodic motions and grazing in a harmonically forced, piecewise, linear oscillator with impacts. Chaos, Solitons & Fractals, 24, 567–578.

[8] Milnor, J., Thurston, W. (1988). On Iterated Maps of the Interval. In: Alexander, J.C. (Ed.), Proceedings Univ. Maryland 1986-1987, Lect. Notes in Math., 1342. Springer-Verlag, Berlin-New York, pp. 465–563.

[9] Ramos, M.M. et al. (2004). Topological invariants of a chaotic pendulum. Int. J. Pure Appl. Math., 10(2), 205–220

[10] Shaw, S.W., Holmes, P.J. (1983). A periodically forced piecewise linear oscillator. J. Sound Vibration, 90(1), 129–155.