UNDER PEER REVIEW

***Original Research Article***

# Parametrical Fluctuations of Epicycle in Wheel Gearboxes

.


## ABSTRACT

**Purpose:** To develop mathematical model of the parametrical fluctuations, conditions of its emergence and development caused by cyclically variable in time rigidity of gearings.
**Methodology:** Modeling of structural parametrical fluctuations of an epicycle is executed on the basis of the differential equation of Mathieu-Hill with variable periodic coefficients and diagnosing of instability of oscillatory system is carried out according to Ains-Strett's chart.
**Results:** it is established that width of area of instability of parametrical fluctuations of an epicycle for a 2*k*-*h* gear depends on coefficient μ pulsations of mesh rigidity and the relation of frequency of own fluctuations $k_0$ of an epicycle to the angular frequency ω of parametrical excitement. Calculations for the given algorithm on the example of wheel gearbox *Raba* designs 118.77 and 318.78, which are widely applied as a part of transmissions of car and electrical wheel transport, confirmed possibility of an elimination of parametrical fluctuations of an epicycle by means of an arrangement of axes of planets, uneven on a circle.
**Conclusion:** the positive effect of influence of an arrangement of axes of planets, uneven on a circle, on depth of a pulsation of rigidity of multiline gearing and narrowing of area of instability of parametrical fluctuations of an epicycle is confirmed.


*Keywords: Planetary gear, mesh rigidity cyclic function, model of parametrical fluctuations.*

## 1. INTRODUCTION

Due to the objective need of increase of reliability and level of comfort of both passenger, and lorry wheel vehicles the problem of restriction of vibration activity of all elements of transmission in the conditions of structural elastic fluctuations is actual. For multiline planetary 2*k*-*h* gears as a part of wheel gearboxes the probability of the parametrical resonances caused by cyclically variable in time rigidity of gearings is very high that negatively influences processes of accumulation of fatigue damages of teethes and a rim of an epicycle. Thus the non-stationary position forces exciting elastic fluctuations of the main links of the mechanism functionally depend on deformations of teethes and time that complicates the solution of problems of increase of vibration resistance and reliability of serial wheel gearbox designs.

In modern researches of vibration activity of tooth gearings much attention is paid to modeling and the analysis of influence of characteristic parameters of multi mass elastic system with final number of degrees of freedom on the main frequencies, characteristics of the compelled fluctuations and dynamics of settlement model. Thus static rigidity of gearings, as a rule, is averaged and accepted by a constant that significantly simplifies the solution of similar tasks [1, 2]. Insufficiently investigated for today are questions of influence of variable rigidity of gearings in time, and also the key geometrical parameters of multiline planetary gears on characteristics of the compelled and structural parametrical fluctuations which are directly connected with vibration resistance and fatigue cyclic durability of the most loaded details and elements of transmissions [3, 4, 5].

Target of this research – mathematical modeling of the parametrical fluctuations, conditions of its emergence and development caused by cyclic change the reduced mesh rigidity.

UNDER PEER REVIEW

The main problem – narrowing of area of instability of parametrical fluctuations of an epicycle taking into account multi paired relationship of gearing and a multiline of planetary gears by optimization of a circle arrangement of axes of planets.

## 2. METHODOLOGY

Multi paired relationship of gearing is characterized by the coefficient of face overlapping $\varepsilon_\alpha$ defined as the overlapping angle $\varphi_\alpha$ (a cogwheel angle of rotation from the provision of an entrance of engage teethes to mesh to their exit from mesh) relation to the corresponding angular step $2\pi / z$. For internal gearing of involutes cylindrical gear as a part of the planetary wheel gearbox (PWG) the coefficient $\varepsilon_\alpha$ is defined geometrically [6]

$$\varepsilon_\alpha = [z_p \operatorname{tg}\alpha_{ap} - z_r \operatorname{tg}\alpha_{ar} + (z_r - z_p)\operatorname{tg}\alpha_w] / 2\pi , \tag{1}$$

where $z$ – number of teethes; $\alpha_a = \arccos(d_b / d_a)$ – angle of a profile of teethes in a point on an addendum circle; $d_b$ – diameter of the main circle; $d_a$ – diameter of an addendum circle of teethes; $\alpha_w = \arccos\left[(a\cos\alpha) / a_w\right]$ – pressure angle; $\alpha$ – profile angle of an initial contour; $a = 0{,}5m(z_r - z_s)$ – pitch inter axle distance; $a_w = a\cos\alpha / \cos\alpha_{tw}$ – initial inter axle distance; $m$ – pitch of a gear; indexes in designations of calculated parameters indicate accessory to: “*s*” – solar pinion; “*p*” – satellites (planets); “*r*” – epicycle (ring).

For serial PWG of Hungarian firm *Raba*, designs 118.77 and 318.78, settlement values of coefficient of overlapping in gearing “an epicycle – the planets” $\varepsilon_\alpha = 1{,}42$ [7]. For modeling of cyclic function of mesh rigidity $c(t)$ it is possible to accept that at turn of the planet round its pivot-center within an angle $(\varepsilon_\alpha - 1)\varphi_{\alpha r}$ loading is transmitted by two pairs of teethes $N_z = 2$, and at turn to an angle $(2 - \varepsilon_\alpha)\varphi_{\alpha r}$ – by one pair $N_z = 1$ (fig. 1, a).

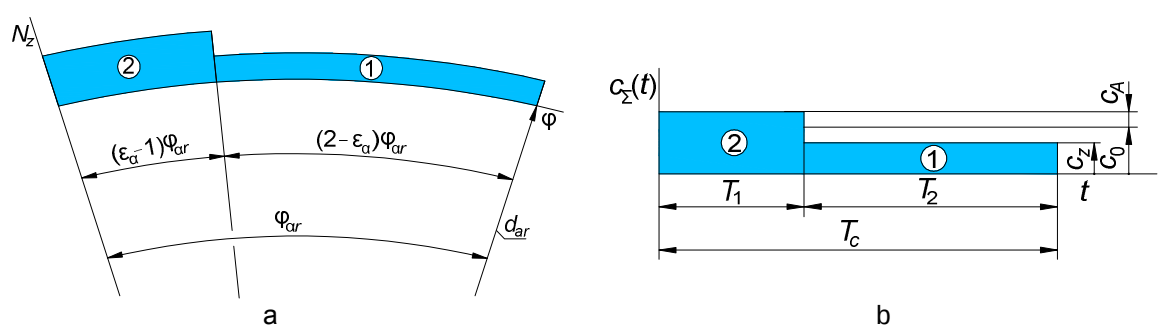


Fig. 1. The circular chart (a) paired relationship of gearing “one planet – an epicycle” and the schedule (b) functions of the reduced mesh rigidity $c_\Sigma(t)$
($N_z$ – the characteristic of paired relationship)

Angular frequency $\omega$ of gearing “one planet – an epicycle” for a 2*k-h* gear is defined depending on numbers of teethes $z_s$, $z_r$, and the angular speed $\omega_s$ of a solar pinion [5]

$$\omega = \frac{z_s z_r}{z_s + z_r}\omega_s . \tag{2}$$

The average and amplitude value of function $c(t)$ are respectively equal $c_0 = 1{,}5c_z$ and $c_A = 0{,}5c_z$ ($c_z$ – average total rigidity of couple of teethes, see figure 1, b).

UNDER PEER REVIEW

For multiline gear with $n_p$ number of planets similar characteristics have the form

$$c_0 = 1{,}5 n_p c_z\,; \quad c_A = 0{,}5 n_p c_z\,. \tag{3}$$

Periodic pulsations of function of the reduced rigidity of one-line gear $c_\Sigma(t)$ are defined by coefficient $\mu = c_A / c_0 = 1/3$ which minimization promotes narrowing of area of instability of parametrical fluctuations. It is theoretically proved efficiency of relative angular shift of axes of $n_p$ = (3; 4) satellites for multiline planetary gears of the main gearbox in military helicopters and automatic transmissions of cars promoting decrease its vibration activity [1, 5].

Angular shift of an axis of the planet *i* relatively an axis of the planet *j* can be presented in the form

$$\Delta\varphi_{ij} = k_{ij}\varphi_{\alpha r} = 2\pi k_{ij}\varepsilon_\alpha / z_r\,, \tag{4}$$

where $k_{ij} = \Delta\varphi_{ij} / \varphi_{\alpha r} \in [-1{,}0;\ 1{,}0]$ – coefficient of relative angular shift of axes of two next planets.

Taking into account (4) angular orientation of axes of planets is determined by a formula

$$\theta_{ij} = 2\pi / n_p + \Delta\varphi_{ij}\,, \tag{5}$$

Follows $\sum_{i,j=1}^{n_p} k_{ij} = 0$ from the condition $\sum_{i,j=1}^{n_p} \theta_{ij} = 360°$.

Creation of the chart of paired relationship $N_z(\varphi)$ of gearings and definition of function of the reduced rigidity $c_\Sigma(t)$ for planetary gear with relative angular shift of axes of planets is carried out on the following algorithm:

– count the nominal rate of coefficient of overlapping $\varepsilon_\alpha$ on dependence (1) (the accounting of features and additional parameters of geometry of teethes of an epicycle and the gear cutting tool, are provided in reference books [6]);

– count an angle of overlapping $\varphi_{\alpha r}$ and divide it into an integer $\xi$ of identical discrete angles (for example, $\xi = 10$) which size $\Delta\varphi$ and quantity $\xi$ depend on the allowed relative error of the decision $\delta = \pm 50/\xi,\ \%$;

– count the overlapping composed angles $(\varepsilon_\alpha - 1)\varphi_{\alpha r}$ and $(2 - \varepsilon_\alpha)\varphi_{\alpha r}$, proportional to phases of two-pair and one-pair gearing, determine integers $\xi_2 + \xi_1 = \xi$ of discrete angles $\Delta\varphi$ for each mesh phase;

– build charts of paired relationship of gearing consistently for each $n_p$ of planets (fig. 2, a);

– count on formulas (4) and (5) of value of coefficients $k_{ij}$, angles $\Delta\varphi_{ij}$ and $\theta_{ij}$ it is consecutive on a circle for each pair of next planets;

– is received schedule of step function of the reduced rigidity $c_\Sigma(\varphi) = c_z N_z(\varphi)$ as a result of summation consistently on sites of gearing of values of the characteristic $N_z$ for all $n_p$ planets (fig. 2, b);

– is received function $c_\Sigma(t)$ as a result of replacement of a variable $\varphi = \omega t$ in the function $c_\Sigma(\varphi) = c_z N_z(\varphi)$.

Calculations for the given algorithm are executed for gear of PWG *Raba* 118.77 with the following parameters $\varepsilon_\alpha$ =1,42, $z_s = 26$, $z_p = 19$, $z_r = 64$, $m = 3{,}25$ mm, $n_p = 3$.

UNDER PEER REVIEW

By results of calculations were determined coefficients of shift of axes of planets $k_{ij}$=(0,4; 0,2; –0,6), angles of shift $\Delta\varphi_{ij} = (2°15'; \ 1°7'; -3°38')$ and orientation $\theta_{ij}$ (fig. 3), characteristic of function of rigidity of $c(t)$: average $c_0 = 4{,}5c_z$ and amplitude $c_A = 0{,}5c_z$ values and pulsation coefficient $\mu = c_A/c_0 = 1/9$. As a result of modeling it is established that at settlement angular shift of axes of planets function of rigidity of $c(t)$ becomes more uniform, the coefficient of a pulsation $\mu$ decreases to 3 times that promotes increase of structural vibration resistance of PWG design.

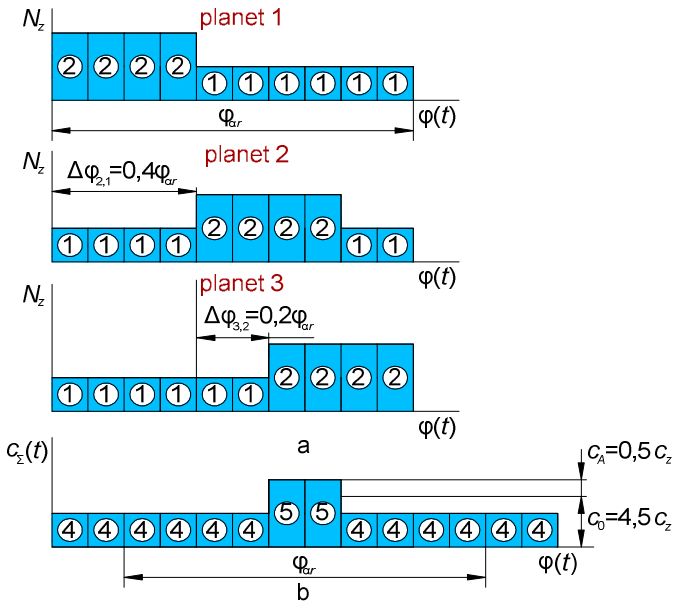


Fig. 2. Charts (a) paired relationship of gearings and the schedule (b) functions of the reduced rigidity for PWG design *Raba* 118.77

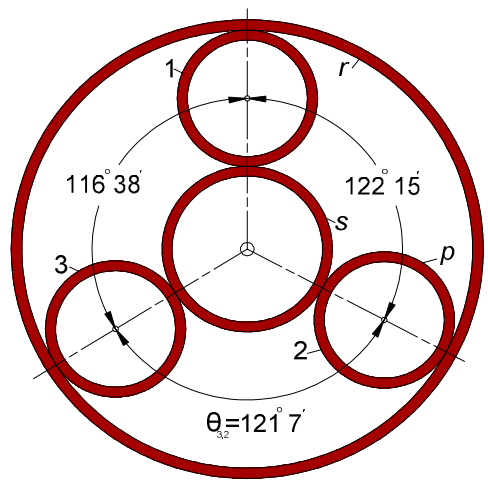


Fig. 3. Scheme of an arrangement of planets for PWG design *Raba* 118.77

Modeling of structural parametrical fluctuations of an epicycle is executed on the basis of the differential equation of Mathieu-Hill with variable periodic coefficients in a form

$$\ddot{q} + k_0^2 (1 - \mu \cos \omega t) q = 0, \tag{6}$$

where $k_0^2 = c_0 / I_r$ – the frequency of free fluctuations of an epicycle; $I_r$ – axial moment of inertia.

The equation (6) after replacement of a variable $\tau = \omega t / 2$ is transformed to a form

$$\frac{d^2 q}{d\tau^2} + (a - 2b \cos 2\tau) q = 0, \tag{7}$$

where $a = 4k_0^2 / \omega^2$; $b = \mu a / 2$. (8)

Solutions of the equation (7) are special functions of Mathieu which can be limited or beyond all bounds increasing [8]. Establishment of the corresponding areas of values of parameters $a$ and $b$ and diagnosing of instability of oscillatory system is carried out according to Ains-Strett's chart (fig. 4).

UNDER PEER REVIEW

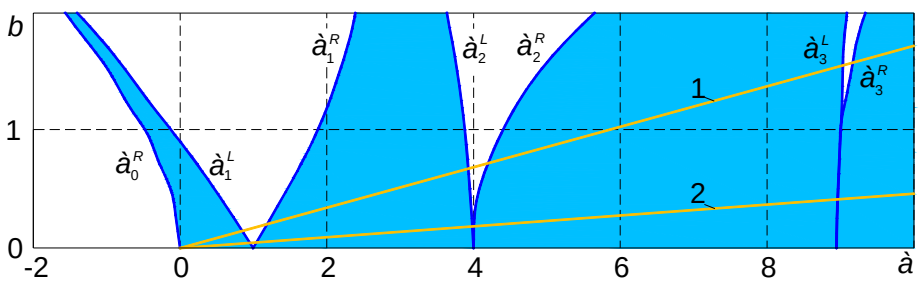


Fig. 4. Chart of stability of parametrical fluctuations
(areas of steady fluctuations are shaded)

The chart is symmetric relatively an axis $a$ as the sign $b$ in the equation (7) doesn't influence its form. The inclined straight lines on the chart of stability corresponding to the equation $b = \mu a/2$ characterize parametrical fluctuations of an epicycle on the equation (7). The way of harmonious balance is also applied to approximate delimitation between areas of stability and instability in the plane of $a$-$b$ parameters. On borders of the first area of instability the movement has to be periodic, corresponding to a row

$$q = A_1 \sin\tau + B_1 \cos\tau + A_3 \sin 3\tau + B_3 \cos 3\tau + \ldots \tag{9}$$

Being limited to the first two members of a row, as a result of substitution of their sum in the equation (7), it is received

$$A_1 \sin\tau\left(-1 + a - 2\varepsilon\frac{1+\cos 2\tau}{2} + 2\varepsilon\sin^2\tau\right) + B_1\cos\tau\left(-1 + a + 2\varepsilon\frac{1-\cos 2\tau}{2} - 2\varepsilon\cos^2\tau\right) = 0\,.$$

Having equated zero coefficients at $\sin\tau$ and $\cos\tau$, neglecting sizes of bigger degree of a trifle ($\sin\tau\cdot\cos 2\tau; \sin^3\tau; \cos\tau\cdot\cos 2\tau; \cos^3\tau$), the uniform equations are received $(a-b-1)A_1 = 0$; $(a+b-1)B_1 = 0$ for the right ($R$) and left ($L$) borders in a form $a^R = 1+b$; $a^L = 1-b$.

Further without conclusion the equations taking into account bigger number of members of a row (9) for borders of the first two areas of instability are given (see figure 4):

$$\left.\begin{aligned}
&a_0^R = -\frac{1}{2}b^2 + \frac{7}{128}b^4 - \cdots; \quad a_1^R = 1 + b - \frac{1}{8}b^2 - \frac{1}{64}b^3 - \frac{1}{1536}b^4 + \cdots;\\
&a_1^L = 1 - b - \frac{1}{8}b^2 + \frac{1}{64}b^3 - \frac{1}{1536}b^4 - \cdots; \quad a_2^R = 4 + \frac{5}{12}b^2 - \frac{763}{13824}b^4 + \cdots;\\
&a_2^L = 4 - \frac{5}{12}b^2 + \frac{5}{13824}b^4 - \cdots
\end{aligned}\right\}. \tag{10}$$

Function $c_\Sigma(t)$ it is accepted in the form of step function of a sine $c_\Sigma(t) = c_0 \pm c_A$ with the period $T_c$ (see figure 1, b). The model of parametrical fluctuations (6) for each of composed the period $T_c = T_1 + T_2$ is presented by the differential equation with constant coefficients

$$\ddot{q} + k_0^2(1 \pm \mu)q = 0\,. \tag{11}$$

UNDER PEER REVIEW

As a result of integration of the equation (11) on sites by the method of a fitting received the standard chart of stability (fig. 5).

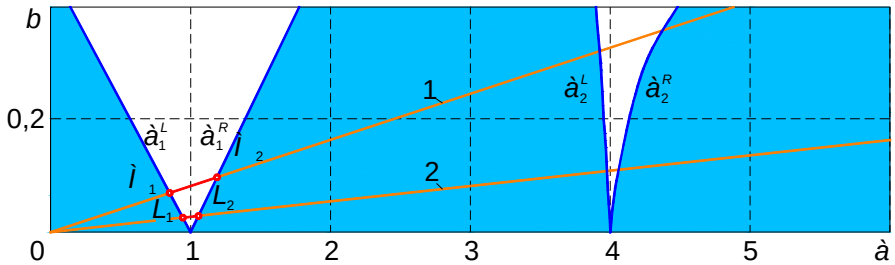


Fig. 5. fragment of the chart of stability of parametrical fluctuations of an epicycle with uniform arrangement of planets (line 1) and uneven (2) in PWG design *Raba* 118.77

At a uniform arrangement of axes of planets to unstable fluctuations there correspond points on $M_1M_2$ section, at uneven – on $L_1L_2$ section. Therefore, at an uneven arrangement of planets considerable reduction of area of unstable fluctuations of an epicycle is reached.

## 3. RESULTS AND DISCUSSION

To parametrical resonances in the chart of stability of parametrical fluctuations corresponds the points of boundary curves with coordinates (see figure 5)

$$a = (1;\ 4;\ 9;\ \ldots) \tag{12}$$

Therefore, the resonance arises with as much as small depth of a pulsation. Thus the case $a = 1$ when average value of own frequency is twice less than a frequency of parametrical excitement is most important. Such parametrical resonance is called the basic. From the first equation (8) at $a = 1$ the condition of manifestation of the main parametrical resonance in a form $k_0 = 0{,}5\omega$ is received. With a considerable depth of a pulsation of function $c_\Sigma(t)$ and essential difference of coefficient of a pulsation $\mu$ from zero the parametrical resonance arises in areas of the values $a$ located close values (12), thus, the more size $\mu$, the is wider these areas. Therefore the problem of detuning from a parametrical resonance in comparison with a linear resonance is much more difficult. The parametrical resonance is more dangerous also for the reason that thanks to a greasing layer linear damping in tooth gearings narrows width of areas of instability of fluctuations a little, but doesn't limit increase of amplitude which at a parametrical resonance increases on the equation of a geometrical progression and can lead to the accelerated development of cracks in a rim of an epicycle [9].

As a result of calculations of PWG design *Raba* 318.78 with parameters $\varepsilon_\alpha = 1{,}42$; $z_s = 26$, $z_p = 19$, $z_r = 64$; $m = 3{,}25$ mm, $n_p = 5$ are defined: coefficients and angles of shift of axes of planets $k_{ij}$ = (0,2; 0,2; – 0,2; – 0,2; 0,0), $\Delta\varphi_{ij}$ = (1º34'; 1º34'; – 1º34'; – 1º34'; 0º), at which function of the reduced rigidity $c_\Sigma(t) = \text{const}$ (fig. 6, 7) that excludes the reasons of parametrical fluctuations of an epicycle.

UNDER PEER REVIEW

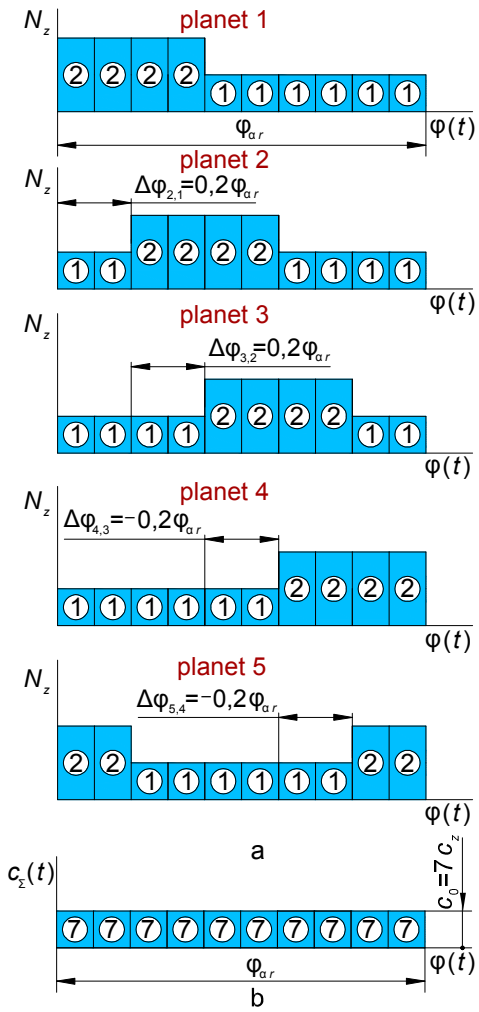


Fig. 6. Charts (a) paired relationship of gearings and the schedule (b) functions of the reduced rigidity for PWG design *Raba* 318.78

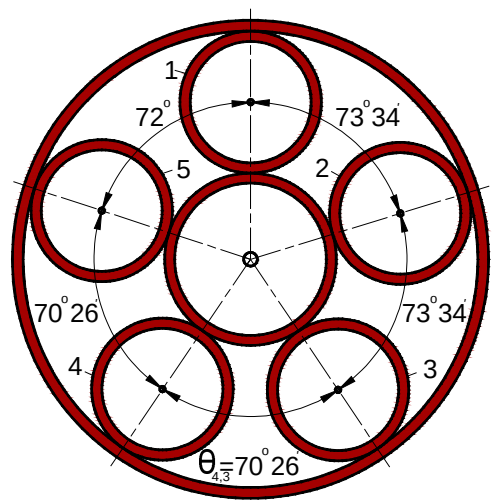

Fig. 7. Scheme of an optimum planets arrangement for PWG design *Raba* 318.78

Results of calculations of PWG design *Raba* 118.77 and 318.78, which are widely applied as a part of transmissions of wheel transport, confirmed possibility of an elimination of parametrical fluctuations of an epicycle by means of an arrangement of axes of planets, uneven on a circle.

## 4. CONCLUSION

It is established that width of area of instability of parametrical fluctuations of an epicycle for a 2*k*-*h* gear depends on coefficient μ pulsations of mesh rigidity and the relation of frequency of own fluctuations $k_0$ of an epicycle to the angular frequency ω of parametrical excitement. The positive effect of influence of an arrangement of axes of planets, uneven on a circle, on depth of a pulsation of rigidity of multiline gearing and narrowing of area of instability of parametrical fluctuations of an epicycle is confirmed. The technique and algorithm of definition of angular locations of axes of planets for the purpose of decrease in amplitude of parametrical fluctuations of multi pair gearings at various values of coefficient of overlapping is developed.

UNDER PEER REVIEW

## REFERENCES


1. Lin J, Parker R. Structured vibration characteristics of planetary gears with unequally spaced planets. Journal of Sound and Vibration. 2000;921-928.
2. Parker R, Wu Xionghua. Vibration modes of planetary gears with unequally spaced planets and elastic ring gear. Journal of Sound and Vibration. 2010;329:2265-2275.
3. Gutyrya S, Yaglinsky V, Chanchin A. Modeljuvannja chastotnyh harakterystyk planetarnogo kolisnogo reduktora trolejbusa. Visnyk NTU «KhPI». 2013;1(975):35-43. Ukranian.
4. Gutyrya S, Yaglinsky V, Chanchin A. Chastotnyi analyz kolebanyi planetarnogo kolesnogo reduktora. Vestnyk Gomel'skogo gosudarstvennogo tehnycheskogo unyversyteta. 2015;2(61):3-11. Russian.
5. Gradu M, Langenbeck K, Breunig B. Planetary Gears with Improved Vibration Behavior in Automatic Transmissions. VDI-Berichte. 1996;1230:861-879.
6. Roloff / Matek. Maschinelemente. Normung, Berechnung, Gestaltung. 2015;840.
7. Gutyrya S, Yaglinsky V, Chanchin A. Navantazhennist', tochnist' ta vibroaktyvnist' kolisnyh reduktoriv. Problemy obchysljuval'noi' mehaniky i micnosti konstrukcij. 2015;24:57-69. Ukranian.
8. Chanchin A. Modeljuvannja pokaznykiv zhorstkosti epicyklu u skladi planetarnogo kolisnogo reduktora. Visnyk NTU «KhPI». 2015;34(1143):144-153. Ukranian.
9. Rand R. H, Sah S. M, Suchrsky M. K. Fractional Mathieu equation. Comun. Nonlinear Sci. Numer. Simulat. 2010;15:3254-3262.