Fuzzy Adaptive Control Design of Induction Motor Speed Sensorless Based on MRAS

Ou-Sheng[1]，Liu Haishan(corresponding author) [2]，Peng-qun[3]，Qi-shiyang[4]，Feng-cong[5]，Mo-pinlong[6]，Liu-guoying[7]

[1-6]School of Electronic and Electrical Engneering, Shanghai university of engineering science, shanghai,20162,china

[7]Shanghai qirod technology company, shanghai,201700, China

Abstract—In order to solve the real-time parameter adjustment problem of the speed sensorless vector control system for the induction motor, the paper presents a fuzzy self-adaptive method with intelligent gain adjustment. By the means of the sensorless vector control for induction motor, adapt Model reference adaptive system (MRAS) to achieve the rotor position estimation to improve the speed and estimated accuracy, and then design the out-loop controller to achieve high response of speed control. So applying the method of the fuzzy self-adaptive parameter adjustment, track and correct controller parameters in time to achieve high dynamic response. The simulation results confirm the validity and effectiveness of the proposed control strategy.

Keywords—Induction motor; Speed-sensorless; Fuzzy self-adaptive; Model reference adaptive system (MRAS)

1. INTRODUCTION

Because of its simple, rugged, reliable, applicable to a wide range of speed change and work in harsh environments, etc., Induction motor in the industrial fields has been widely used. From the early constant frequency ratio control mode to vector control, to achieve high-performance control of induction motors, which requires induction motor Variable Frequency Regulating speed control system has strong robustness and excellent dynamic and static characteristics. Restricted conditions, speed sensor control technology eliminates the need for sensors to estimate the motor parameters online technology, which means that the speed sensor-free control can improve the transmission capacity of the space under the original conditions. Another example is in mining and other heavy industries, in the traditional form of asynchronous motor speed control system, closed-loop speed feedback link is usually through the installation of the speed encoder on the motor to achieve the actual speed of the sampling. While even in the speed encoder transmission system, speed sensorless control can also be used as a coder emergency measures in case of failure. The key is to adopt this approach not only reduces the entire drive system configuration and maintenance costs, also increased the reliability of the system.

Currently, a lot of Variable-frequency Drive on the market have the speed sensorless vector control as an optional configuration, With the introduction of digital signal processor with powerful processing capabilities to achieve the desired control high robustness, adaptive parameter estimation and nonlinear state observer as possible, the new speed sensorless control scheme has introduced. Siemens, Yaskawa, Toshiba, GE, Rockwell, Mistubishi, Fuji and other famous companies have launched their own SVC control products. Therefore, as an

extended form of induction motor speed control vector control program, speed sensorless vector control has become necessary to develop high-performance drive the focus solutions.

In sensorless vector control system, flux observation and speed estimates are the most critical two technologies, and usually both are interrelated. This is because regardless the field oriented vector control scheme or DTC scheme, the flux observer was originally part of the impact motor control performance. In some control systems, the performance flux observer is even more important: not only requires the flux observer that cannot measure the actual speed at the situation remains the accuracy of observations, often need to flux observer as a basis for estimate the motor speed. At present, about the speed sensorless vector control, especially on flux observer and speed estimation aspect has made a lot of achievements. Sliding Mode Control[5], Robust Control Adaptive Control[6],the emergence of non-linear control technology, to provide a credible basis for rotor flux obtain accurate information for the induction motor sensorless vector control, Solve nonlinear itself, multivariate and uncertainties brought about by the induction motor limitations.

In this paper, the design of a non-speed sensor fuzzy adaptive control system based on MRAS of Induction Motor, compared to other control algorithm to achieve relatively simple, and it has a good control performance. by the system rotor flux voltage and current equation calculates the rotor flux, the model reference adaptive system(MRAS) to calculate the speed, the use of fuzzy adaptive PID control loop parameters to achieve the speed gain from adjustment of the method It makes the system in the event of a serious argument does not match, still can have a good robustness and anti-interference ability, establish intelligent fuzzy control system.

2. SENSORLESS VECTOR CONTROL SYSTEM BASED ON MRAS

Based on the principle of induction motor control sensorless vector control, access to the rotor flux magnitude and angle is one of the most critical factors affecting the system control performance and speed detection accuracy of a direct impact on the accuracy of the magnetic field orientation. AC variable speed without speed sensorless while reducing the equipment, it also avoids the error rate that sensor itself may bring. This design uses has a greater influence in the field of speed sensorless control, and in this structure adjust a few parameters, only the adaptation rate proportional integral factor in the design and commissioning are relatively simple model reference adaptive system (referred to as MRAS). The literature [1,2,3,4,8] are given on the realization of MRAS Flux Observer approach and do the relevant simulation and verification, continuous improvement of this method. In view of this, In this paper, the vector control technology of the rotor field orientation(foc) is adopted. The rotor flux observer is built by using the voltage model and current model based on the rotor voltage equation and flux linkage equation of $\alpha\beta$ coordinate system, and using model reference adaptive system (MRAS) to calculate the speed. In the two-phase stationary coordinate ab voltage equation and flux equations were as type 1 and type 2. The basic relationship shown in fig. 1: $\psi^*_{\alpha\gamma}$, $\psi^*_{\beta\gamma}$ are in accordance with the voltage model rotor flux obtained; $\hat{\psi}_{\alpha\gamma}$, $\hat{\psi}_{\beta\gamma}$ are the rotor flux calculated in accordance with the current model.

$$\begin{bmatrix} u_{s\alpha} \\ u_{s\beta} \\ u_{r\alpha} \\ u_{r\beta} \end{bmatrix} = \begin{bmatrix} R_s + L_S P & 0 & L_m & 0 \\ 0 & R_s + L_s p & 0 & L_m p \\ L_m P & \omega_r L_m & R_r + L_r p & \omega_r L_r \\ -\omega_r L_m & L_m p & -\omega_r L_r & R_r + L_r p \end{bmatrix} \begin{bmatrix} i_{s\alpha} \\ i_{s\beta} \\ i_{r\alpha} \\ i_{r\beta} \end{bmatrix} \quad (1)$$

$$\begin{bmatrix} \psi_{s\alpha} \\ \psi_{s\beta} \\ \psi_{r\alpha} \\ \psi_{r\beta} \end{bmatrix} = \begin{bmatrix} L_S & 0 & L_m & 0 \\ 0 & L_s & 0 & L_m \\ L_m & 0 & L_r & 0 \\ 0 & L_m & 0 & L_r \end{bmatrix} \begin{bmatrix} i_{s\alpha} \\ i_{s\beta} \\ i_{r\alpha} \\ i_{r\beta} \end{bmatrix} \quad (2)$$

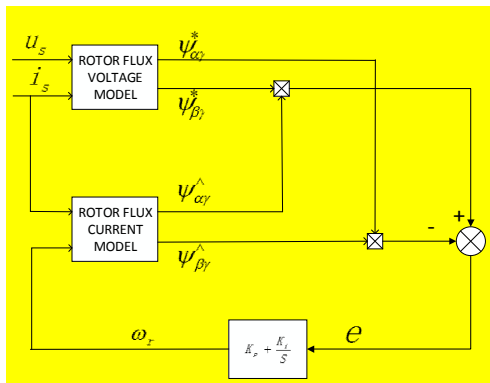

Fig.1 Diagram of the speed signal based on MRAS

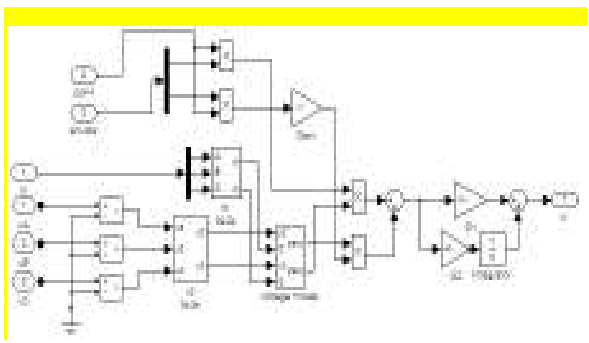

Fig.2 Mode of speed calculation

According to the formula flux model can be derived as follows (derivation omitted), which estimate the flux including its magnitude and angle.

$$\begin{cases} \psi_r = \left[L_m/\left(1 + T_r P\right)\right] i_{sd} \\ \omega_s = \left(L_m i_{sq}\right)/T_r \psi_r \\ \theta = \int_0^t \left(\omega_r + \omega_s\right) dt \end{cases} \quad (1)$$

Where: ψ_r is the rotor flux; ω_s is the slip angular velocity; ω_r is the rotor speed; i_{sd}, i_{sq} as the stator d ,q-axis current; T_r is the rotor time constant, $T_r = L_r/R_r$, L_m is the stator and rotor mutual inductance, L_r is the rotor inductance; R_r is the rotor resistance ; θ is the flux angle, $P = \mathrm{du}/\mathrm{dt}$.

3. FUZZY PI PARAMETERS SPEED LOOP GAIN SELF-TUNING

When the motor with the actual load, due to actual load torque and load inertia and default parameter settings is not consistent, the speed loop bandwidth narrows, if at this time speed band width to meet the demand, no motor speed crawling or oscillation phenomenon, which cannot adjust the speed loop proportional gain and integral time constant. If the actual load make the motor work instability, crawling or oscillation occurs or existing velocity loop bandwidth is not ideal, we need to speed loop proportional gain, integration time constant adjustment. Adjusting these two parameters is an iterative process, which requires accurate knowledge and experience about the load. Therefore gain self-adjusting speed loop parameters reduce the dependence on human parameter adjustment for the motor action closer to instruction, to maximize mechanical properties, thereby adjust the gain. In this paper, fuzzy adaptive PID control [7] [9][10]to achieve the speed loop gain self-adjustment parameters, the method enables the system parameters in the event of a serious mismatch, still can have a good robustness and noise immunity, the establishment of intelligent fuzzy control system.

In this paper, fuzzy adaptive system mainly by the integral separation k links, error e and error change ec discrete, fuzzy aspects, fuzzy control query table, control output proportional link, and online parameters self-tuning links and other components. Adaptive fuzzy controller error e and error rate of change Δec as input to meet the request for different moments of e and Δec of PID tuning parameters, by means of fuzzy rules to achieve effective correction online PID parameters, which formed a fuzzy adaptive PID controller that performance adjustable gain supervised.

The core of the design of fuzzy control is to sum up the technical knowledge and practical experience of engineering design, and to establish a proper fuzzy rule table to obtain the fuzzy control table for Kp, Ki and Kd parameters. The system error and error change rate is defined as the domain of fuzzy sets, e,ec={-3,-2,-1,0,1,2,3}, Its fuzzy subset, e,ec={NB,NM,NS,Z0,PS,PM,PB},where e\ec、Kp、Ki are normally distributed, Whereby each fuzzy subset membership is obtained, And in accordance with the membership table of each

fuzzy subset and fuzzy control model of the parameters, using fuzzy synthesis to design fuzzy matrix of PI parameters, which make control system complete PI parameters tuning online by being analysis, looking up and operating the result of fuzzy logic rules. Figure 3 shows the structure diagram of the fuzzy adaptive parameter self-tuning control structure.

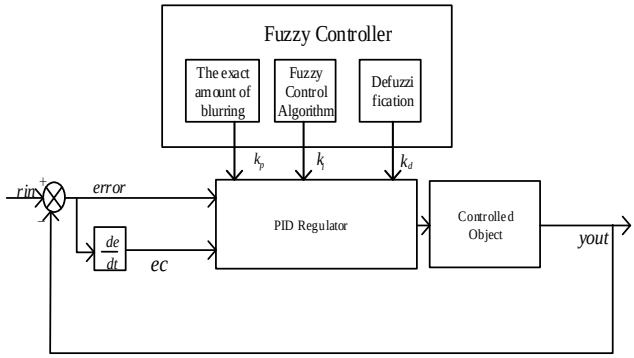

Fig.3 Fuzzy self-adaptive control structure

4. SIMULATION ANALYSIS

To verify asynchronous motors with fuzzy parameters self-tuning controller sensorless control system performance, we use Matlab / Simulink control system for digital simulation, Fig.4 is speed sensorless vector control system on MRAS.

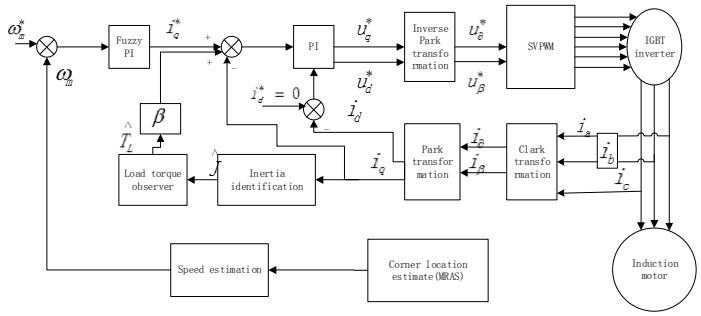

Fig.4 Speed sensorless vector control based on MRAS

In this paper to simulate the actual conditions of the asynchronous motor operating environment, the following is the simulation parameters and results. Induction Motors parameters are as follows: 30KW, 380 V, 50 Hz, 4 counter electrode. The initial value is 0 rad/ s, Speed is given as 500rpm, Load torque initial value of zero, 0.4 s when loading 60N • m. From Figure 5 it can be seen that, although at the beginning, the estimated speed curve has some fluctuation, but it is very fast to estimate the speed curve and the actual speed curve basically coincide, the convergence time and the precision of speed identification are very high.

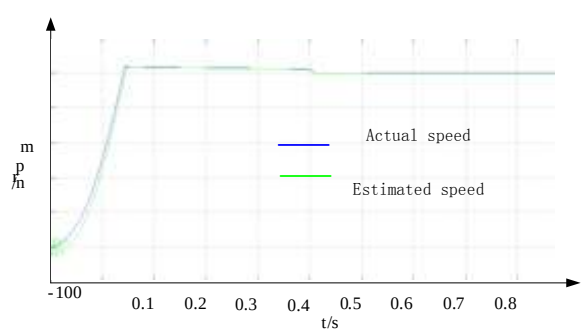

Fig.5 Comparison of actual and calculation speed

From Figure 6 it can be seen that the fuzzy PID controller has a faster response speed than the ordinary PID controller when starting up. At 0.4s, the system suddenly increases 60N.M, and the effect of fuzzy PID controller is much smaller than that of the ordinary PID controller. The robustness of fuzzy PID controller is better. Figure 7 shows the load torque value, which indicates that the identification accuracy is high.

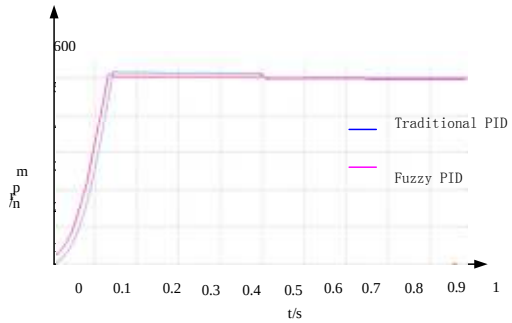

Fig.6 Comparison of Fuzzy self-tuning PID and tradition

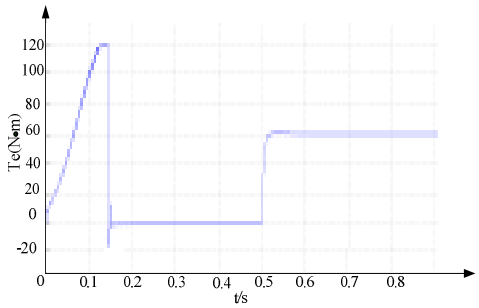

Fig.7 Load torque based on Fuzzy self-adaptive

Speed loop controller adopts fuzzy adaptive algorithm, which is used to adjust the PI parameters of the speed loop.，which make the speed response is more close to the actual speed，the dynamic response and precision of the system are improved, and the robustness of the system is enhanced.

5. CONCLUSION

The speed sensorless vector control of induction motor has been widely recognized by the industry. In addition, the artificial intelligence algorithm is more and more widely used in the engineering practice, the different control method, for different occasions, each has advantages and disadvantages. This paper focuses on the speed estimation MRAS method and PI parameter fuzzy self-tuning two angles for simulation analysis. The simulation results show that the speed estimation method has certain feasibility and as artificial intelligent control of fuzzy control, for asynchronous motor without sensor vector system steady state performance and dynamic response will be constantly improved, and its application will be

more and more widely.

REFERENCES

[1] Yang Xinhua, Ma Jianli, Wang Guanping. Research of Speed Sensorless Vector Control of Induction Motor Based onModelReference Adaptive System [J]. Electric Machines & Control Application, 2007,34 (8): 22-26.

[2] WANG Jian, Nian Xiao-hong, GUI Wei-hua. A New Speed Sensorless Control Method of Asynchronous Motor.[J]. Proceedings of the CSEE. 2008, 28(3):96-101

[3] Chen Shi-jun, GAO Jun-lin, DENG Ze-ming. Research of Vector Control System without Speed Sensor for Induction Motor [J]. 2010, 365(10):159-161

[4] Wang Gaolin, Yang Rongfeng, Zhang Jiawan. Rotor Time Constant On-Line Estimation of Induction Motors Based on MRAS [J]. 2012 TRANSACTIONS OF CHINA ELECTROTECHNICAL SOCIETY Vol.27(4):48-53

[5] WANG Song, XIAO Jian. Hardware-in-the-Loop Simulation for Induction Motor On-line State Identification Based on Sliding Mode Observer [J] Journal of System Simulation 2009 Vol.26(1):181-190

[6] Cheng guodong. Speed sensorless vector control system of induction motor based on adaptive ful-order observer[J], The World of Inverters, 2014, 4:65-69

[7] Liu haishan, Chen yuchen, Yue yan. BLDCM control system based on Fuzzy self-tuning[J] Zhejiang University 2007（37）

[8] Zhao Haisen, Du Zhonglan, Liu Xiaofang. On-line Identification Method for Rotor Resistance of Squirrel Cage Induction Motors Based on Recursive Least Square Method and Model Reference Adaptive System. Proceedings of the CSEE. 2014, 34(30):5386-5394.

[9] Yang Zebin, Wang Mingtao, Sun Xiaodong. Control system of bearingless induction motors based on adaptive neuro-fuzzy inference system. Transactions of the Chinese Society of Agricultural Engineering. 2014, 30(2):78-85.

[10] Chang Xiaoli, Fu Wei, Liang Hu. Estimation of Speed and Torque of Three-phase Induction Motor Based on Central Difference Extended Kalman Filter Algorithm. JOURNALOFTESTANDMEASUREMENTTECHNOLOGY, 2015, 29(3):261-265.