British Journal of Mathematics & Computer Science
X(X): XX-XX, 20XX

SCIENCEDOMAIN *international*
www.sciencedomain.org

Stable recovery of sparse signal in Compressed Sensing via the RIP of order less than s

Hiroshi Inoue[*1]

[1]*Graduate School of Mathematics, Kyushu University, 744 Motooka, Nishi-ku, Fukuoka 819-0395, Japan.*

Research Article

Received: XX December 20XX
Accepted: XX December 20XX
Online Ready: XX December 20XX

Abstract

Our goal is to reconstruct an unknown sparse signal. In this paper, we consider the feature of the sparse signal and research good conditions for the recovery of sparse signals. In detail, we assume that $\boldsymbol{h} \equiv \boldsymbol{x}^\star - \boldsymbol{x}$ and $\boldsymbol{h} = (h_1, h_2, \cdots, h_n)$, where $\boldsymbol{x}$ is an unknown signal and $\boldsymbol{x}^\star$ is the CS-solution. Furthermore for simplicity, we assume that the index of $\boldsymbol{h}$ is sorted by $|h_1| \geq |h_2| \geq \cdots \geq |h_n|$ and $T_0 = \{1, 2, \cdots, s\}$. In this paper, we focus the quality of $\boldsymbol{h}_{T_0}$. In more details, we shall reseach good conditions for the recovery of sparse signals by investigating the difference between the mean $\frac{|h_1|+|h_2|+\cdots+|h_s|}{s}$ and the mean $\frac{|h_1|+|h_2|+\cdots+|h_r|}{r}$, $r = 1, 2, \cdots, s$. We shall show that if $\delta_s < 0.366$ by the quality of $\boldsymbol{x}$, and similarly if $\delta_{\frac{2}{3}s} < 0.436$, then we have stable recovery of approximately sparse signals.

Keywords: Compressed sensing, Restricted isometry constants, Restricted isometry property, Sparse approximation, Sparse signal recovery.

1 Introduction

This paper introduces the theory of compressed sensing(CS). For a signal $\boldsymbol{x} \in \boldsymbol{R}^n$, let $\|\boldsymbol{x}\|_0$ be the l_0-norm of $\boldsymbol{x}$, which is defined to be the number of nonzero coordinates, $\|\boldsymbol{x}\|_1$ be the l_1-norm of $\boldsymbol{x}$ and $\|\boldsymbol{x}\|_2$ be the l_2-norm of $\boldsymbol{x}$. Let $\boldsymbol{x}$ be a sparse or nearly sparse vector. Compressed sensing aims to recover high-dimensional signal (for example: images signal, voice signal, code signal...etc.) from only a few samples or linear measurements. Efficient recovery of sparse signals has been a very active field in applied mathematics, statistics, machine learning and signal processing. Formally, one considers the following model:

$$\boldsymbol{y} = A\boldsymbol{x} + \boldsymbol{z}, \tag{1.1}$$

**Corresponding author: E-mail: h-inoue@math.kyushu-u.ac.jp*

where A is a $m \times n$ matrix($m < n$) and $\boldsymbol{z}$ is an unknown noise term.

Our goal is to reconstruct an unknown signal $\boldsymbol{x}$ based on A and $\boldsymbol{y}$ are given. Then we consider reconstructing $\boldsymbol{x}$ as the solution $\boldsymbol{x}^\star$ to the optimization problem

$$\min_{\boldsymbol{x}} \|\boldsymbol{x}\|_1, \quad \text{subject to } \|\boldsymbol{y} - A\boldsymbol{x}\|_2 \leq \varepsilon, \tag{1.2}$$

where ε is an upper bound on the the size of the noisy contribution.
In fact, a crucial issue is to research good conditions under which the inequality

$$\|\boldsymbol{x} - \boldsymbol{x}^\star\|_2 \leq C_0 \|\boldsymbol{x} - \boldsymbol{x}_T\|_1 + C_1 \varepsilon, \tag{1.3}$$

for some suitable constants C_0 and C_1, where T is any location of $\{1, 2, \cdots, n\}$ with number $|T| = s$ of elements of T and $\boldsymbol{x}_T$ is the restriction of $\boldsymbol{x}$ to indices in T. One of the most generally known condition for CS theory is the restricted isometry property(RIP) introduced by [6]. When we discuss our proposed results, it is an important notion. The RIP needs that the subsets of columns of A for all locations in $\{1, 2, \cdots, n\}$ behave nearly orthonormal system. In detail, a matrix A satisfies the RIP of order s if there exists a constant δ with $0 < \delta < 1$ such that

$$(1 - \delta)\|\boldsymbol{a}\|_2^2 \leq \|A\boldsymbol{a}\|_2^2 \leq (1 + \delta)\|\boldsymbol{a}\|_2^2 \tag{1.4}$$

for all s-sparse vectors $\boldsymbol{a}$. A vector is said to be an s-sparse vector if it has at most s nonzero entries. The minimum δ satisfying the above restrictions is said to be the restricted isometry constant and is denoted by δ_s.
Many researchers has been shown that l_1 optimization can recover an unknown signal in noiseless case and in noisy case under various sufficient conditions on δ_s or δ_{2s} when A obeys the RIP. For example, E.J. Candès and T. Tao have proved that if $\delta_{2s} < \sqrt{2} - 1$, then an unknown signal can be recovered [6]. Later, S. Foucart and M. Lai have improved the bound to $\delta_{2s} < 0.4531$ [8]. Others, $\delta_{2s} < 0.4652$ is used in [7], $\delta_{2s} < 0.4721$ for cases such that s is a multiple of 4 or s is very large in [2], $\delta_{2s} < 0.4734$ for the case such that s is very large in [7] and $\delta_s < 0.307$ in [2]. In a resent paper, Q. Mo and S. Li have improved the sufficient condition to $\delta_{2s} < 0.4931$ for general case and $\delta_{2s} < 0.6569$ for the special case such that $n \leq 4s$ [10]. T. Cai and A. Zhang have improved the sufficient condition to $\delta_s < 0.333$ for general case [3]. T. Cai and A. Zhang have improved the sufficient condition to δ_k in case of $k \geq \frac{4}{3}s$ in particular $\delta_{2s} < 0.707$ [4]. By using rescaling method, H. Inoue has obtained the sufficient conditions of $\tilde{\delta}_s < 0.5$ and $\tilde{\delta}_{2s} < 0.828$ in [9].
In this paper, the main propose is to show the various sufficient conditions with respect to the quality of each sparse signal. In particular, we shall reseach good conditions for the recovery of sparse signals by investigating the difference between the l_∞- norm of $\boldsymbol{h} \equiv \boldsymbol{x}^\star - \boldsymbol{x}$ and the mean $\frac{|h_1|+|h_2|+\cdots+|h_s|}{s}$ of $\{|h_1|, \cdots, |h_s|\}$. In more details, we consider a function p on $\{1, 2, \cdots, s\}$ defined by

$$p(r) = \frac{|h_1| + |h_2| + \cdots + |h_r|}{|h_1| + |h_2| + \cdots + |h_s|}, \quad r = 1, 2, \cdots, s.$$

Then, $p(1) > \frac{1}{s}$ if and only if $p(r) > \frac{r}{s}$, $r = 1, 2, \cdots, s$, that is, this means that $(\text{the mean } \frac{|h_1|+|h_2|+\cdots+|h_r|}{r}) > (\text{the mean } \frac{|h_1|+|h_2|+\cdots+|h_s|}{s})$, $r = 1, 2, \cdots s$. In this case, take an arbitrary $c > 1$ such that $\frac{1}{s} < \frac{c}{s} < p(1)$. In Theorem 2.1, we shall show that if A obeys the RIP of order $\frac{2s}{c}$ and $\delta_{\frac{2s}{c}} < \frac{1}{1+\sqrt{\frac{2-p(r_c)}{p(r_c)}}}$, then we have stable recovery of approximately sparse signals, where r_c is a natural number such that $\frac{c}{s}(r_c - 1) < p(r_c) \leq \frac{c}{s} r_c$, $2 \leq r_c < \frac{s}{c}$. For example, in case that $p(\frac{1}{4}s) > \frac{1}{2}$, if $\delta_s < 0.366$, and in case that $p(\frac{1}{4}s) > \frac{3}{4}$, if $\delta_{\frac{2}{3}s} < 0.436$, then we have stable recovery of approximately sparse signals. In Theorem 2.2, we shall consider the recovery of s-sparse signals in case that $p(1) = \frac{1}{s}$, equivalently, the mean $\frac{|h_1|+|h_2|+\cdots+|h_r|}{r} = \frac{|h_1|+|h_2|+\cdots+|h_s|}{s}$, $r = 1, 2, \cdots, s$. In this paper, we give the sufficient conditions for recovery of signal $\boldsymbol{x}$ under various assumptions for the function $p(r)$ which depends on $\boldsymbol{x}$. Though a signal $\boldsymbol{x}$ is unknown, a signal $\boldsymbol{x}$ has the various features. The idea of this paper

introduce that we obtain new results by considering the features of a signal $\boldsymbol{x}$ in order to analyze each signal $\boldsymbol{x}$. Hence it seems to be useful for various real data analysis.

Our analysis is very simple and elementary. We introduce the proposed results using the T. Cai and A. Zhang idea and H. Inoue idea. We regard Theorem 2.1 as the main proof in general case, and regard Theorem 2.2 as the main results in this paper. Otherwise, in Section 2, we prepare some notions and lemmas to prove the main theorems, and we introduce new bounds of $\delta_{\frac{2s}{c}}$ and δ_s.

2 Main Theorem

2.1 Preliminaries and Some Lemmas

We first prepare two Lemmas needed for the proof of Theorem 2.1.

The following result plays an important rule in this paper.

Lemma 2.1. For a positive number α and a positive integer k, define the polytope $T(\alpha, k) \subset \boldsymbol{R}^p$ by

$$T(\alpha, k) = \{\boldsymbol{v} \in \boldsymbol{R}^p;\ \|\boldsymbol{v}\|_\infty \le \alpha,\ \|\boldsymbol{v}\|_1 \le k\alpha\}. \tag{2.1}$$

For any $\boldsymbol{v} \in \boldsymbol{R}^p$, define the set of sparse vectors $U(\alpha, k, \boldsymbol{v}) \subset \boldsymbol{R}^p$ by

$$\begin{aligned} U(\alpha, k, \boldsymbol{v}) = \{&\boldsymbol{u} \in \boldsymbol{R}^p;\ \mathrm{supp}(\boldsymbol{u}) \subseteq \mathrm{supp}(\boldsymbol{v}), \\ &\|\boldsymbol{u}\|_0 \le k,\ \|\boldsymbol{u}\|_1 = \|\boldsymbol{v}\|_1,\ \|\boldsymbol{u}\|_\infty \le \alpha\}. \end{aligned} \tag{2.2}$$

Then $\boldsymbol{v} \in T(\alpha, k)$ if and only if $\boldsymbol{v}$ is in the convex hull of $U(\alpha, k, \boldsymbol{v})$. In particular, any $\boldsymbol{v} \in T(\alpha, k)$ can be expressed as

$$\begin{aligned} \boldsymbol{v} &= \sum_{i=1}^{N} \lambda_i \boldsymbol{u}_i, \quad 0 \le \lambda_i \le 1, \\ \sum_{i=1}^{N} \lambda_i &= 1, \quad \boldsymbol{u}_i \in U(\alpha, k, \boldsymbol{v}). \end{aligned} \tag{2.3}$$

Proof. The proof of this Lemma can be obtained by [[4], Lemma 1.1].

Suppose that A obeys the RIP of order $s' + s''$. Then the following is easily shown.

Lemma 2.2. Let s' and s'' be positive integers. Then

$$\left|\langle A\boldsymbol{a}',\ A\boldsymbol{a}''\rangle\right| \le \delta_{s'+s''}\|\boldsymbol{a}'\|_2\|\boldsymbol{a}''\|_2$$

for any s'-sparse vector $\boldsymbol{a}'$ and s''-sparse vector $\boldsymbol{a}''$ in $\boldsymbol{R}^n$ with disjoint supports.

Suppose that $\boldsymbol{x}$ is an original signal we need to recover and $\boldsymbol{x}^\star$ is the solution of CS optimization problem (1.2). Let $\boldsymbol{h} \equiv \boldsymbol{x}^\star - \boldsymbol{x}$ and $\boldsymbol{h} = (h_1, h_2, \cdots, h_n)$. For simplicity, we may assume that the index of $\boldsymbol{h}$ is sorted by $|h_1| \ge |h_2| \ge \cdots \ge |h_n|$. By (1.2) we have

$$\|A\boldsymbol{h}\|_2 \le 2\varepsilon. \tag{2.4}$$

Throughout this paper, we put any $r \in \boldsymbol{N},\ 1 \le r \le s$ fixed. Let $T_0 = \{1, 2, \cdots, s\}$. By the definition of CS optimization (1.2), we have

$$\|\boldsymbol{h}_{T_0^c}\|_1 \le \|\boldsymbol{h}_{T_0}\|_1 + 2\|\boldsymbol{x} - \boldsymbol{x}_s\|_1, \tag{2.5}$$

where $\boldsymbol{x}_s$ is the vector consisting the s-largest entries of $\boldsymbol{x}$ in magnitude. For any location T of $\{1, 2, \cdots, n\}$ we denote the i-component of $\boldsymbol{h}_T$ by h_i^T. We may suppose $\|\boldsymbol{h}\|_\infty = |h_1| \neq 0$ with out loss of generality. Then an increasing function $p(r)$ on T_0 is defined by

$$p(r) \equiv \frac{|h_1| + \cdots + |h_r|}{\|\boldsymbol{h}_{T_0}\|_1}, \quad r \in T_0.$$

For the function $p(r)$ we can easily show that

$$p(1) \geq \frac{p(r)}{r} \geq \frac{1}{s}. \tag{2.6}$$

and

$$p(1) = \frac{1}{s} \text{ if and only if } |h_1| = \cdots = |h_s|. \tag{2.7}$$

The following two cases arise:
Case 1. $p(1) > \frac{1}{s}$.
Case 2. $p(1) = \frac{1}{s}$.

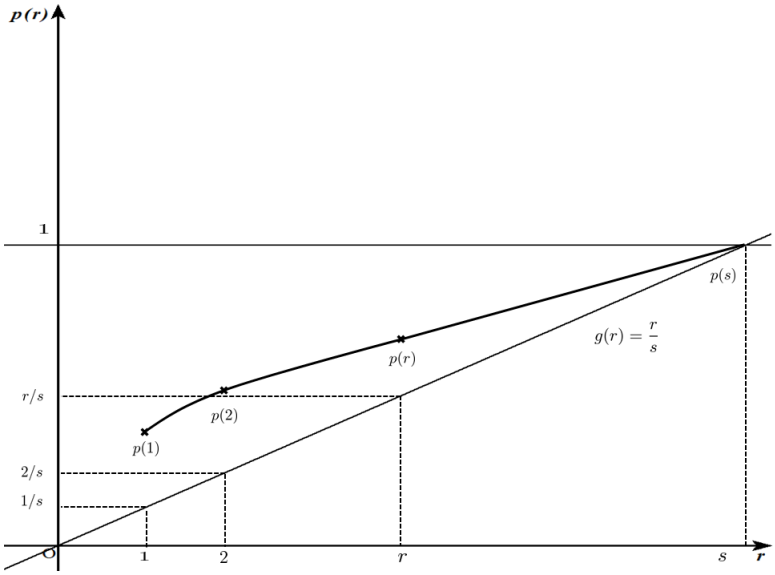

Figure 1: Case.1: $p(1) > \frac{1}{s}$

We first consider Case 1. Take an arbitrary $c > 1$ such that $\frac{1}{s} < \frac{c}{s} < p(1)$. Let r_c be a natural number such that

$$\frac{c}{s}(r_c - 1) < p(r_c) \leq \frac{c}{s} r_c, \quad 2 \leq r_c < \frac{s}{c}. \tag{2.8}$$

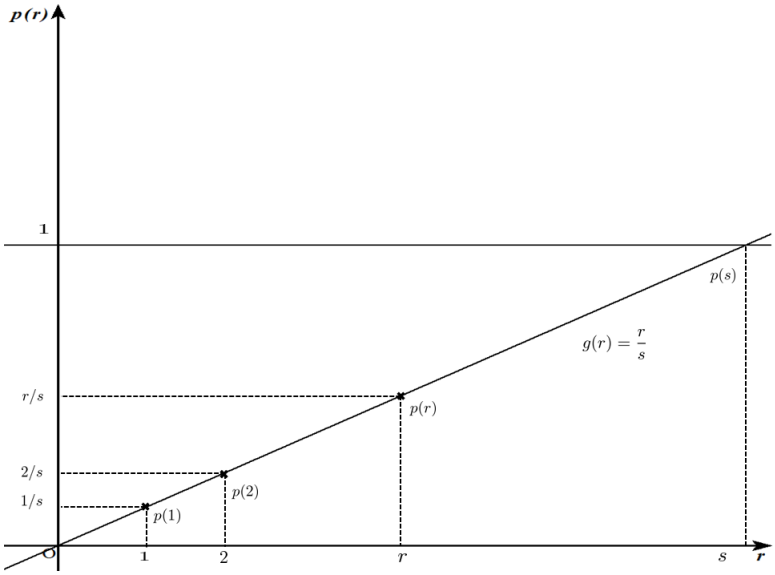

Figure 2: Case.2: $p(1) = \frac{1}{s}$

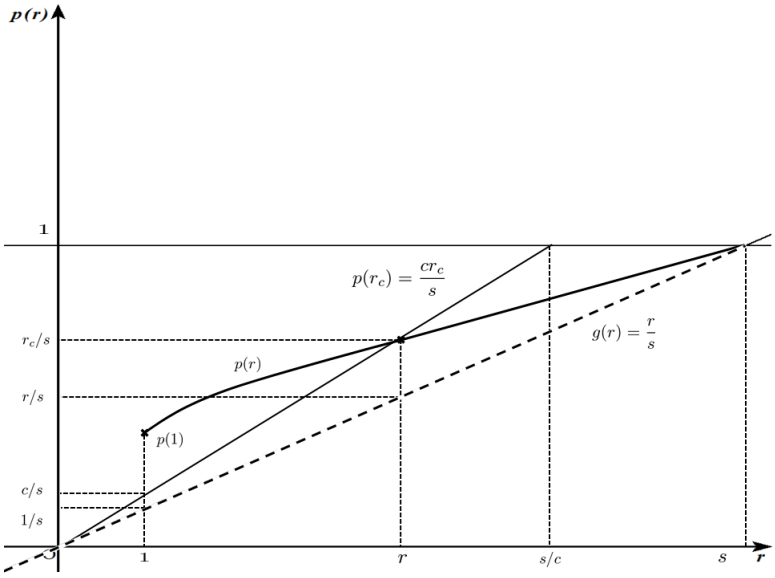

Figure 3: $\frac{c}{s}(r_c - 1) \leq p(r_c) \leq \frac{c}{s} r_c, \quad 2 \leq r_c < \frac{s}{c}$.

2.2 Case.1.

The following main theorem shows that if $\delta_{\frac{2s}{c}} < \frac{1}{1+\sqrt{\frac{2-p(r_c)}{p(r_c)}}}$, then we have stable recovery of approximately sparse signal $\boldsymbol{x}$.

Theorem 2.1. Let $\boldsymbol{x}$ be any vector in $\boldsymbol{R}^n$. Assume that A obeys the RIP of order $\frac{2s}{c}$ and $\delta_{\frac{2s}{c}} < \frac{1}{1+\sqrt{\frac{2-p(r_c)}{p(r_c)}}}$. Then, the solution $\boldsymbol{x}^\star$ to (1.2) obeys

$$\begin{aligned} \|\boldsymbol{x}-\boldsymbol{x}^\star\|_2 &\leq C_0\|\boldsymbol{x}-\boldsymbol{x}_s\|_1 \\ &+ C_1\varepsilon, \end{aligned} \tag{2.9}$$

where

$$\begin{aligned} C_0 &= \frac{2\left(\left(\sqrt{\frac{2-p(r_c)}{p(r_c)}}-1\right)\delta_{\frac{2s}{c}}+1\right)}{1-\left(1+\sqrt{\frac{2-p(r_c)}{p(r_c)}}\right)\delta_{\frac{2s}{c}}}, \\ C_1 &= \frac{4\sqrt{r_c(1+\delta_{r_c})}}{p(r_c)\left(1-\left(1+\sqrt{\frac{2-p(r_c)}{p(r_c)}}\right)\delta_{\frac{2s}{c}}\right)}. \end{aligned}$$

Proof. We put

$$\alpha \equiv \frac{\|\boldsymbol{h}_{T_0}\|_1+2\|\boldsymbol{x}-\boldsymbol{x}_s\|_1}{s}. \tag{2.10}$$

Let $T_1 \equiv \{1,2,\cdots,r_c\}$ and $T_2 \equiv \{r_c+1,\cdots,n\}$ be a decomposition of $\{1,2,\cdots,n\}$. By (2.6) and (2.8), we have

$$\|\boldsymbol{h}_{T_2}\|_\infty \leq \frac{p(r_c)}{r_c}\|\boldsymbol{h}_{T_0}\|_1 \leq \alpha c \tag{2.11}$$

and so

$$\begin{aligned} \|\boldsymbol{h}_{T_2}\|_1 &= \|\boldsymbol{h}_{T_0^c}\|_1+\|\boldsymbol{h}_{T_0\cap T_2}\|_1 \\ &\leq \alpha s+(1-p(r_c))\|\boldsymbol{h}_{T_0}\|_1 \\ &\leq (2-p(r_c))\alpha s \\ &= \alpha c\left(\frac{2-p(r_c)}{c}s\right). \end{aligned} \tag{2.12}$$

Using Lemma 2.1 for $k \equiv \frac{2-p(r_c)}{c}s$, there exist $\{\lambda_i\}_{1\leq i\leq N}$ and $\{\boldsymbol{u}_i\}_{1\leq i\leq N}$ such that

$$\boldsymbol{h}_{T_2} = \sum_{i=1}^{N}\lambda_i\boldsymbol{u}_i,$$

where

$$\begin{aligned} 0\leq\lambda_i\leq 1 \quad &, \quad \sum_{i=1}^{N}\lambda_i = 1 \\ \text{supp}\,\boldsymbol{u}_i &\subset T_2, \\ |\text{supp}\,\boldsymbol{u}_i| &\leq \frac{2-p(r_c)}{c}s, \\ \|\boldsymbol{u}_i\|_\infty &\leq \alpha c, \end{aligned} \tag{2.13}$$

and so

$$\begin{aligned}\|\boldsymbol{u}_i\|_2 &\leq \|\boldsymbol{u}_i\|_\infty \sqrt{|\text{supp } \boldsymbol{u}_i|} \\ &\leq \alpha c\sqrt{\frac{2-p(r_c)}{c}s} \\ &= \alpha\sqrt{s}\sqrt{c(2-p(r_c))}. \end{aligned} \tag{2.14}$$

By (2.8) and (2.13), we have

$$|T_1| + |\text{supp } \boldsymbol{u}_i| = r_c + \frac{2-p(r_c)}{c}s = \frac{2s}{c},$$

and hence it follows from (2.6) that

$$\begin{aligned}\alpha s &= \|\boldsymbol{h}_{T_0}\|_1 + 2\|\boldsymbol{x}-\boldsymbol{x}_s\|_1 \\ &= \frac{1}{p(r_c)}\|\boldsymbol{h}_{T_1}\|_1 + 2\|\boldsymbol{x}-\boldsymbol{x}_s\|_1 \\ &\leq \frac{\sqrt{r_c}}{p(r_c)}\|\boldsymbol{h}_{T_1}\|_2 + 2\|\boldsymbol{x}-\boldsymbol{x}_s\|_1,\end{aligned}$$

which implies by Lemma 2.2, (2.8) and (2.14) that

$$\begin{aligned}|\langle A\boldsymbol{h}_{T_1}, A\boldsymbol{u}_i\rangle| &\leq \delta_{\frac{2s}{c}}\|\boldsymbol{h}_{T_1}\|_2\|\boldsymbol{u}_i\|_2 \\ &\leq \delta_{\frac{2s}{c}}\|\boldsymbol{h}_{T_1}\|_2\left(\alpha\sqrt{s}\sqrt{c(2-p(r_c)}\right) \\ &\leq \delta_{\frac{2s}{c}}\sqrt{\frac{cr_c}{s}}\frac{\sqrt{2-p(r_c)}}{p(r_c)}\|\boldsymbol{h}_{T_1}\|_2 + \frac{2\sqrt{c(2-p(r_c))}}{\sqrt{s}}\|\boldsymbol{h}_{T_1}\delta_{\frac{2s}{c}}\|_2\|\boldsymbol{x}-\boldsymbol{x}_s\|_1 \\ &\leq \delta_{\frac{2s}{c}}\sqrt{\frac{2-p(r_c)}{p(r_c)}}\|\boldsymbol{h}_{T_1}\|_2^2 + 2\sqrt{\frac{p(r_c)(2-p(r_c))}{r_c}}\delta_{\frac{2s}{c}}\|\boldsymbol{h}_{T_1}\|_2\|\boldsymbol{x}-\boldsymbol{x}_s\|_1. \end{aligned} \tag{2.15}$$

Since A obeys the RIP of order $\frac{2s}{c}$, it follows from (2.4) and (2.13) that

$$\begin{aligned}&(1-\delta_{r_c})\|\boldsymbol{h}_{T_1}\|_2^2 \leq \|A\boldsymbol{h}_{T_1}\|_2^2 \\ \leq\ & |\langle A\boldsymbol{h}_{T_1}, A\boldsymbol{h}\rangle| + |\langle A\boldsymbol{h}_{T_1}, A\boldsymbol{h}_{T_2}\rangle| \\ \leq\ & \sqrt{1+\delta_{r_c}}\|\boldsymbol{h}_{T_1}\|_2\cdot 2\varepsilon + \sum_{i=1}^{N}\lambda_i\,|\langle A\boldsymbol{h}_{T_1}, A\boldsymbol{u}_i\rangle|\end{aligned}$$

which implies by (2.15) that

$$\begin{aligned}&(1-\delta_{\frac{2s}{c}})\|\boldsymbol{h}_{T_1}\|_2 \leq (1-\delta_{r_c})\|\boldsymbol{h}_{T_1}\|_2 \\ \leq\ & 2\sqrt{1+\delta_{r_c}}\varepsilon + \sqrt{\frac{2-p(r_c)}{p(r_c)}}\delta_{\frac{2s}{c}}\|\boldsymbol{h}_{T_1}\|_2 + 2\sqrt{\frac{p(r_c)(2-p(r_c))}{r_c}}\delta_{\frac{2s}{c}}\|\boldsymbol{x}-\boldsymbol{x}_s\|_1.\end{aligned}$$

Since

$$\left(1+\sqrt{\frac{2-p(r_c)}{p(r_c)}}\right)\delta_{\frac{2s}{c}} < 1,$$

we have

$$\|\boldsymbol{h}_{T_1}\|_2 \leq \frac{2\sqrt{1+\delta_{r_c}}\varepsilon + 2\sqrt{\frac{p(r_c)(2-p(r_c))}{r_c}}\delta_{\frac{2s}{c}}\|\boldsymbol{x}-\boldsymbol{x}_s\|_1}{1-\left(1+\sqrt{\frac{2-p(r_c)}{p(r_c)}}\right)\delta_{\frac{2s}{c}}}. \tag{2.16}$$

Using (2.5), (2.6) and (2.16), we have

$$\begin{aligned}
\|\boldsymbol{x}-\boldsymbol{x}^\star\|_2 &\leq \|\boldsymbol{x}^\star-\boldsymbol{x}\|_1 \\
&= \|\boldsymbol{h}_{T_0}\|_1+\|\boldsymbol{h}_{T_0^c}\|_1 \\
&\leq 2\|\boldsymbol{h}_{T_0}\|_1+2\|\boldsymbol{x}-\boldsymbol{x}_s\|_1 \\
&= \frac{2}{p(r_c)}\|\boldsymbol{h}_{T_1}\|_1+2\|\boldsymbol{x}-\boldsymbol{x}_s\|_1 \\
&\leq \frac{2\sqrt{r_c}}{p(r_c)}\left(\frac{2\sqrt{1+\delta_{r_c}}\varepsilon+2\sqrt{\frac{p(r_c)(2-p(r_c))}{r_c}}\delta_{\frac{2s}{c}}\|\boldsymbol{x}-\boldsymbol{x}_s\|_1}{1-\left(1+\sqrt{\frac{2-p(r_c)}{p(r_c)}}\right)\delta_{\frac{2s}{c}}}\right)+2\|\boldsymbol{x}-\boldsymbol{x}_s\|_1 \\
&= \frac{4\sqrt{r_c(1+\delta_{r_c})}}{p(r_c)\left(1-\left(1+\sqrt{\frac{2-p(r_c)}{p(r_c)}}\right)\delta_{\frac{2s}{c}}\right)}\varepsilon+\frac{2\left(\left(\sqrt{\frac{2-p(r_c)}{p(r_c)}}-1\right)\delta_{\frac{2s}{c}}+1\right)}{1-\left(1+\sqrt{\frac{2-p(r_c)}{p(r_c)}}\right)\delta_{\frac{2s}{c}}}\|\boldsymbol{x}-\boldsymbol{x}_s\|_1.
\end{aligned}$$

This completes the proof.

Example. We give the sufficient conditions for recovery of a signal $\boldsymbol{x}$ under various assumptions for the functions $p(r)$.
(1) Take $p(r_c)=1$, then we have $r_c=s$ and $c=1$ and $\delta_{2s}<\frac{1}{2}$ implies that

$$\|\boldsymbol{x}-\boldsymbol{x}^\star\|_2 \leq \frac{2}{1-2\delta_{2s}}\|\boldsymbol{x}-\boldsymbol{x}_s\|_1+\frac{4\sqrt{s(1+\delta_s)}}{1-2\delta_{2s}}\varepsilon.$$

(2) Take $p(r_c)=\frac{1}{2}$, then we have $c=\frac{s}{2r_c}$ and $\delta_{4r_c}<\frac{\sqrt{3}-1}{2}\approx 0.366$ implies that

$$\|\boldsymbol{x}-\boldsymbol{x}^\star\|_2 \leq \frac{2\left(\left(\sqrt{3}-1\right)\delta_{4r_c}+1\right)}{1-\left(1+\sqrt{3}\right)\delta_{4r_c}}\|\boldsymbol{x}-\boldsymbol{x}_s\|_1+\frac{8\sqrt{r_c(1+\delta_{r_c})}}{1-\left(\sqrt{3}+1\right)\delta_{4r_c}}\varepsilon.$$

For a signal $\boldsymbol{x}$ in case that $r_c=\frac{s}{4}$, that is, $|h_1|+\cdots+|h_{\frac{s}{4}}|=\frac{1}{2}\|\boldsymbol{h}_{T_0}\|_1$, we have $c=2$ and $\delta_s<\frac{\sqrt{3}-1}{2}\approx 0.366$ implies that

$$\|\boldsymbol{x}-\boldsymbol{x}^\star\|_2 \leq \frac{2\left(\left(\sqrt{3}-1\right)\delta_s+1\right)}{1-\left(1+\sqrt{3}\right)\delta_s}\|\boldsymbol{x}-\boldsymbol{x}_s\|_1+\frac{4\sqrt{s\left(1+\delta_{\frac{s}{4}}\right)}}{1-\left(\sqrt{3}+1\right)\delta_s}\varepsilon.$$

(3) Take $p(r_c)=\frac{3}{4}$, then we have $c=\frac{3s}{4r_c}$ and $\delta_{\frac{8}{3}r_c}<\frac{\sqrt{15}-3}{2}\approx 0.436$ implies that

$$\|\boldsymbol{x}-\boldsymbol{x}^\star\|_2 \leq \frac{2\left(\left(\sqrt{\frac{5}{3}}-1\right)\delta_{\frac{8}{3}r_c}+1\right)}{1-\left(1+\sqrt{\frac{5}{3}}\right)\delta_{\frac{8}{3}r_c}}\|\boldsymbol{x}-\boldsymbol{x}_s\|_1+\frac{16\sqrt{r_c(1+\delta_{r_c})}}{3\left(1-\left(1+\sqrt{\frac{5}{3}}\right)\delta_{\frac{8}{3}r_c}\right)}\varepsilon.$$

For a signal $\boldsymbol{x}$ in case that $r_c=\frac{s}{4}$, that is, $|h_1+\cdots+|h_{\frac{s}{4}}|=\frac{3}{4}\|\boldsymbol{h}_{T_0}\|_1$, we have $c=3$ and $\delta_{\frac{2}{3}s}<0.436$ implies that

$$\|\boldsymbol{x}-\boldsymbol{x}^\star\|_2 \leq \frac{2\left(\left(\sqrt{\frac{5}{3}}-1\right)\delta_{\frac{2}{3}s}+1\right)}{1-\left(1+\sqrt{\frac{5}{3}}\right)\delta_{\frac{2}{3}s}}\|\boldsymbol{x}-\boldsymbol{x}_s\|_1+\frac{8\sqrt{s\left(1+\delta_{\frac{s}{4}}\right)}}{3\left(1-\left(1+\sqrt{\frac{5}{3}}\right)\delta_{\frac{2}{3}s}\right)}\varepsilon.$$

2.3 Case.2.

We next consider Case 2. Then we define a function p_2 on $T_0 \equiv \{1, 2, \cdots, 2s\}$ by

$$p_2(r) = \frac{|h_1| + \cdots + |h_r|}{|h_1| + \cdots + |h_{2s}|}, \quad 1 \le r \le 2s. \tag{2.17}$$

Similarly to (2.7), we can show that $p_2(1) = \frac{1}{2s}$ if and only if $|h_1| = |h_2| = \cdots = |h_{2s}|$. In this case, if A obeys the RIP of order $2s$ and $\boldsymbol{x}$ is s-sparse, then by (2.5)

$$\begin{aligned} \|\boldsymbol{h}_{T_0}\|_1 &\ge \|\boldsymbol{h}_{T_0^c}\|_1 \\ &= (|h_{s+1}| + \cdots + |h_{2s}|) + (|h_{2s+1}| + \cdots + |h_n|) \\ &= \|\boldsymbol{h}_{T_0}\|_1 + (|h_{2s+1}| + \cdots + |h_n|). \end{aligned}$$

Hence we have $h_{2s+1} = \cdots = h_n = 0$, and so $\boldsymbol{h}$ is a $2s$-sparse vector. Since A obeys the RIP of order $2s$, it follows from (2.4) that

$$(1 - \delta_{2s})\|\boldsymbol{h}\|_2^2 \le \|A\boldsymbol{h}\|_2^2 \le 4\varepsilon^2,$$

which implies that

$$\|\boldsymbol{x}^\star - \boldsymbol{x}\|_2 = \|\boldsymbol{h}\|_2 \le \frac{2}{\sqrt{1 - \delta_{2s}}}\varepsilon. \tag{2.18}$$

In case that $p_2 \ne \frac{1}{2s}$, we can obtain a similar result of Theorem 2.1, but it is not interesting since the assessment is not better than that of the T. Cai and A. Zhang [4] in general case.

In case that $\boldsymbol{x}$ is not a s-sparse vector we consider a function p_3 on $\{1, 2, \cdots, 3s\}$ by

$$p_3(r) = \frac{|h_1| + \cdots + |h_r|}{|h_1| + \cdots + |h_{3s}|}, \quad 1 \le r \le 3s. \tag{2.19}$$

Then $p_3(1) = \frac{1}{3s}$ if and only if $|h_1| = |h_2| = \cdots = |h_{3s}|$. If this is true, then

$$\begin{aligned} \|\boldsymbol{h}_{T_0}\|_1 + 2\|\boldsymbol{x} - \boldsymbol{x}_s\|_1 &\ge \|\boldsymbol{h}_{T_0^c}\|_1 \\ &= 2\|\boldsymbol{h}_{T_0}\|_1 + (|h_{3s+1}| + \cdots + |h_n|), \end{aligned} \tag{2.20}$$

which implies that

$$\begin{aligned} \|\boldsymbol{h}\|_2 &= 2\|\boldsymbol{h}_{T_0}\|_1 + (|h_{3s+1}| + \cdots + |h_n|) \\ &\le 4\|\boldsymbol{x} - \boldsymbol{x}_s\|_1. \end{aligned} \tag{2.21}$$

In case that $p_3(1) \ne \frac{1}{3s}$, it is also not interesting from the same reason as $p_2(1) \ne \frac{1}{2s}$. Thus we have the following result for Case 2:

Theorem 2.2. Let $\boldsymbol{x}$ be any vector in $\boldsymbol{R}^n$. Then we have the following:
(1) Suppose that $p_2(1) \equiv \frac{|h_1|}{|h_1| + \cdots + |h_{2s}|} = \frac{1}{2s}$. Then if A obeys the RIP of order $2s$ and $\boldsymbol{x}$ is a s-sparse vector, then

$$\|\boldsymbol{x}^\star - \boldsymbol{x}\|_2 \le \frac{2}{\sqrt{1 - \delta_{2s}}}\varepsilon. \tag{2.22}$$

(2) Suppose that $p_3(1) \equiv \frac{|h_1|}{|h_1| + \cdots + |h_{3s}|} = \frac{1}{3s}$. Then

$$\|\boldsymbol{x}^\star - \boldsymbol{x}\|_2 \le 4\|\boldsymbol{x} - \boldsymbol{x}_s\|_1. \tag{2.23}$$

References

[1] T. Cai, L. Wang and G. Xu, Shifting inequality and recovery of sparse signals, IEEE Transactions on Signal Processing. 2010;50:1300–1308.

[2] T. Cai, L. Wang and G. Xu, New bounds for restricted isometry constants, IEEE Transactions on Information Theory. 2010;56:4388–4394.

[3] T. Cai and A. Zhang, Sharp RIP Bound for Sparse Signal and Low-Rank Matrix Recovery, Applied and Computational Harmonic Analysis. 2013;35:74–93.

[4] T. Cai and A. Zhang, Sparse representation of a polytope and recovery of sparse signals and low-rank matrices, IEEE Transactions on Information Theory.

[5] E.J. Candès, The restricted isometry property and its implications for compressed sensing, Compte Rendus de I' Academie des Sci. 2008;346:589–592 Serie I.

[6] E.J. Candès and T. Tao, Decoding by linear programming, IEEE Transactions on Information Theory. 2005;51:4203–4215.

[7] S. Foucart, A note on guaranteed sparse recovery via l_1-minimization, Applied and Computational Harmonic Analysis. 2010;29:97–103.

[8] S. Foucart and M. Lai, Sparsest solutions of underdetermined linear systems via l_q-minimization for $0 < q \leq 1$, Applied and Computational Harmonic Analysis. 2009;26:395-407.

[9] H. Inoue, Sufficient conditions for CS-recovery, British Journal of Mathematics & Computer Science. 2014;4(2):184–198.

[10] Q. Mo and S. Li, New bounds on the restricted isometry constant δ_{2k}, Applied and Computational Harmonic Analysis. 2011;31:460-468.